西子泵業 XIZI PUMPS

——Provide users with high-quality pumps and the best water solutions

西子泵業 XIZI PUMPS

CE ISO9001

WQA series submersible sewage pumps(0.55-315kW)



- The cable adopts water-jet cutting technology (standard configuration for 11kW and above),which effectively prevents liquid water and moisture from entering the pump
- The pump adopts advanced hydraulic model
Most models have truly achieved full-heads, wide high-efficiency zones and stable performance
- Multiple detection and protection (standard configuration for 18.5kW and above),
PTC, oil-water probe and float switch can all realize real-time detection and functions like alarm, shutdown, fault signals retention and so on
- Motor cavity can be checked through motor inspection hole without disassembling,and float switch can be replaced at any time
- Impeller nut adopts anti-reverse structure design
- Flexible handle, using tripod lifting, flexible in rotation, convenient, safe and fir
- 100% qualified before leaving factory , executive standard is GB/T3216

30 years of profession and dedication

Hangzhou XIZI Pump Industry Co.,Ltd

Address: No.8,Shunqi Road,Tangqi industrial park,
Linping disctrict,Hangzhou city
Tel: 0571-88111009 88115515 88111688
Fax: 0571-88112660
PC: 311106
E-mail: sale@xizipumps.com
Http://www.xizipumps.com

(Reserve authority for technical changes)
(2021.12)

Hangzhou XIZI Pump Industry Co.,Ltd

Company Profile

Enterprise brief introduction

Hangzhou XIZI Pump Industry Co., Ltd. has been committed to the development and production of water environment products for over 30 years. Since its establishment in 1994, XIZI has always been committed to technological innovation, with products widely used in urban and rural water supply and drainage, sewage lifting and transportation, environmental treatment,etc.

Main products include submersible sewage pumps, sewage cutting pumps, stainless steel submersible sewage pumps, integrated prefabricated pumping stations, sewage lifts, grease separators, etc.

The company uses CAD design, CFD fluid analysis and testing software for product development. XIZI has a fully automatic water pump type test center and well-established ISO9001 quality management system, continuously obtaining honors like "Provincial Quality Products", "Provincial Quality Trustworthy Enterprise" and "AAA-level Credit Unit".

With the business policy of "Quality First, Customer First, Credit First", and the goal of "Customer oriented, High quality, Innovation and improvement", XIZI Pump Industry continues to grow with good reputation and perfect service quality.

—— Jumping and never-ending,with higher goals and pursuits,XIZI will create a better future with you all !



Honors and certificates



















Content

◎ Product description ---------- 01
◎ Application scope ---------- 01
◎ Working conditions ---------- 01
◎ Product features ---------- 01
◎ Technical descriptions ---------- 03
◎ Installation dimension drawing ---------- 05
◎ Attachment list ---------- 06
◎ Standard wiring diagram of main control cable of WQA submersible sewage pump ------ 09
◎ Special monitoring device of WQA submersible sewage pump ---------- 12
◎ Structure diagram of WQA products ---------- 13
◎ Main materials and configuration table ---------- 14
◎ Long-distance layout plan and cable specifications ---------- 16
◎ Parameter table of WQA submersible motor ---------- 18
◎ Installation method ---------- 21
◎ Order description ---------- 21
◎ Supply list ---------- 22
◎ WQA50Hz performance curve chart ---------- 23
◎ WQA installation dimension drawing ---------- 28
◎ Flange coupling parts dimension table ---------- 28
◎ Pump appearance and mobile installation ---------- 29
◎ WQA installation dimension table ---------- 30
◎ Installation instructions ---------- 35
◎ Diving cable connection ---------- 35
◎ Common malfunctions and solutions ---------- 37

Product description

WQA series submersible sewage pumps of Hangzhou XIZI Pump Industry, serve customers with better reliability and higher unit efficiency. Based on submersible pump manufacturing and experience accumulation of over 30 years, references and lead-in of international advanced hydraulic model design technology, XIZI pumps have achieved wide efficient zone, high efficiency and stable performance.Most pump models have realized full-heads, which completely solves customer's over-current problem.Meanwhile, comprehensive optimization in mechanical structure,sealing and protection, as well as high-quality motor material adoption,can ensure the stability of the unit. There are 182 models in WQA all series.

The product implements national standard of GB/T24674《Submersible Sewage Pumps》.

Application scope

Mainly used in municipal engineering,sewage treatment,building construction,water conservancy projects, industrial drainage,environmental protection,hospitals,hotels,etc..Pumps are used for conveying waste water with solid particles and long fiber, sewage, rainwater, and also raw water transportation, aquaculture, irrigation, etc.

Working conditions

1. Flow rate: 7~4200m3/h
2. Head: 7~80m
3. Medium temperature: ≤40℃
4. Medium density: ≤1100kg/m3, the volume ratio of solid phase < 3%
5. Medium pH range: 4~10
6. The standard configuration of cable is 9 meters.You can specify in the order if other length is required.(Note: the voltage drop needs to be calculated)
7. Motor insulation class: F class (standard), H class (optional)
8. Protection level: Ip68
9. Minimum operating liquid level: Refer to " " in the installation dimension drawing(no motor cooling system). Please call our technical department if user's liquid level is lower than " ".
10. The maximum diameter of solids in the medium should be less than the minimum size of the flow channel. The allowable passing solids diameters are detailed in the dimension table of specific pump model.

Product features

1. The impeller adopts closed structure with two main form: ① Double channel type ② Vane type
The double-channel type impeller has good dirt passing performance.The vane type impeller is energy-saving and efficient.
2. The pump unit has a compact structure and short shaft extension to reduce vibration and noise. It has undergone strict dynamic and static balance testing to reduce vibration value to the lowest point,and extend the expectancy life of bearing and mechanical seal.
3. The cable adopts rubber flexible cable with good oil resistance and excellent mechanical performance, which can work continuously for a long time under 40℃.The interception capacity of the cable has sufficient margin to make the service life longer.The oil-resistant rubber flexible cable meets national standards of JB/T8735.2 and GB/T5013.4.
The water-jet cutting cable prevents accidental water immersion in motor cavity .The pump end cable should be properly fixed to avoid dragging of the sealing device of lead-out wire of the motor upper cover cable .

4. The motor adopts high-performance squirrel-cage induction motor, which is specially designed and manufactured for submersible pumps. It Implements GB755 standards. Protection class: IP68. Insulation class: F (standard), H (optional)
5. The shaft seal adopts single-end mechanical seal to completely isolate motor and pump. It is installed in series up and down to improve sealing reliability,and ensure the long-term and stable operation of pump. The designed service life of mechanical seal is 8,000 hours.
6. The bearing adopts lifelong maintenance-free rolling bearings.The upper bearing is deep groove ball bearing or cylindrical roller bearing, which is mainly used to bear radial force. The lower bearing is mainly used to bear radial force and axial force. Given that various pump models will generate different radial force and axial force,some are designed as a double-row angular contact ball bearing, and some are combinations of a diagonal contact ball bearing and a cylindrical roller bearing or deep groove ball bearing to ensure sufficient load margin, making the pump unit run smoothly. The designed service life of the bearing is 10,000 hours.
7. Oil chamber: Adopt 32# engine oil which can lubricate mechanical seal and cool down the bearing.Executive standard is GB443-89.
Add oil till it overflows from the filling hole to ensure that there is a certain gap in the oil chamber, so that the pressure will not rise significantly when oil temperature rises. This is to protect the mechanical seal in oil chamber, thereby protecting the motor.
8. Temperature measuring element (thermal protector is equipped for 3kW and below): Each phase winding is pre-embedded with temperature measuring element PTC (135℃).When the pump is in abnormal working condition,and the motor winding temperature rise reaches the setting value, the temperature measuring element will work,the "overheating" indicator light on control cabinet will be turned on, the pump will stop working.This reminds the operator to check and find out overheating causes and solutions in time.
The pump can recover by itself after the winding temperature drops.
9. Water leakage probe: The water leakage probe is used for leakage detection. When the mechanical seal or the sealing at impeller side is leaking, and the water amount in oil chamber is large to a certain extent, the two electrodes of the probe will be turned on and an alarm signal will be issued(the indicator lights on), to remind the operator to check mechanical seal in time and check whether the oil in oil chamber need to be replaced.
10. Float switch: The float switch is installed in the empty cavity next to the bearing cavity on the lower side of motor. It is used to check whether the mechanical seal in oil chamber is damaged and whether the motor seal is leaking. When the water amount in the float switch cavity reaches a certain level, the float switch will float and send an alarm signal through control cabinet (the indicator lights on), to remind the operator to check mechanical seal and motor sealing system in time.

Structural diagram of water-jet cutting cable

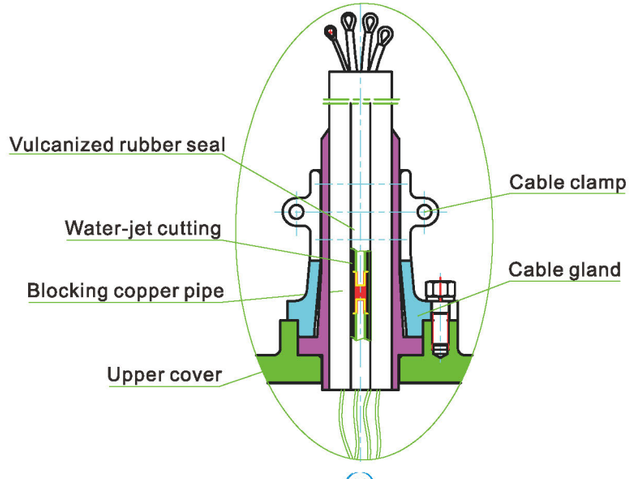

Technical descriptions

1. Model definition

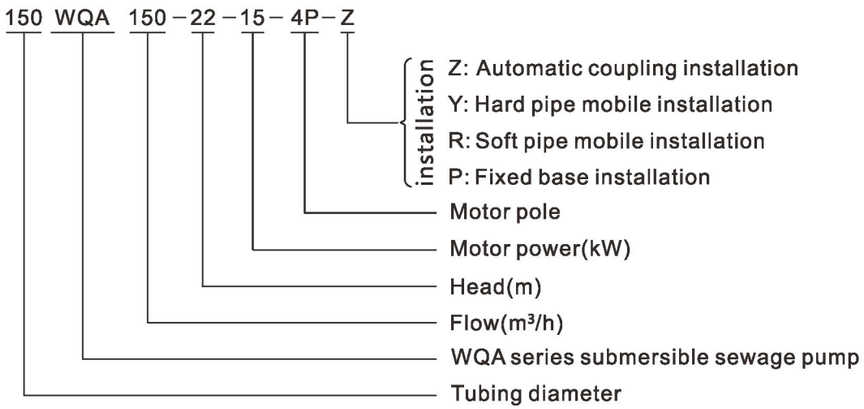

2. WQA can be equipped with flange coupling which implements GB/T17241.6-2008 standard.The standard configuration for coupling outlet flange DN250 and below is PN6 and for DN300 and above is PN10. Pump outlet flange pressure rating is detailed in related pump page.
3. For WQA submersible sewage pump 7.5kW and below,pump can be equipped with stirring (JY)
4. The standard motor rated voltage of submersible sewage pump is 380V, and the rated power is 50Hz.
① 11kW and above can be customized with frequency 30~50Hz frequency conversion electric pump unit.
② The 60Hz electric pump unit can be customized.
③ Electric pump units with three-phase voltage below 690V can be manufactured.
④ Single-phase 220V can be manufactured for WQA 2.2kW and below.
⑤ Frequency conversion can be used for WQA 7.5kW and below.
⑥ Three-phase 220V can be manufactured for WQA 3kW and below.
5. Wiring method and starting method of motor winding lead wire
① The Y-shaped wiring method is used for 3kW and below.The stator lead-out wire and a main cable have been connected in the wiring cavity with this method.It can use direct start.
② The internal delta (△) wiring method is used for 4-315kW. when the pump leaves the factory, the winding wires and 1, 2, 3, and 4 main cables have been connected in the wiring cavity according to power level. Based on the power grid capacity and load permit on customer's site, direct start, external electronic soft starter start or auto-coupling step-down start can be adopted accordingly. (Please refer to wiring diagram for the number of main cable)
③ Single-phase 220V electric pump (0.55-2.2kW) adopts capacitor operation, double capacitor + centrifugal switch start.
④ If there are other requirements (eg: Star Delta Start Y-), please specify separately when placing an order.
6. Pump rotation direction
The impeller rotates counterclockwise looking from pump inlet.The impeller rotates clockwise looking from the motor.
7. When the liquid level difference is large on customer's site , use two float switches to control the start/stop liquid level for main pump or large pump, while using one float switch for small pump or standby pump under super high liquid level.
8. The terminal box can be installed on the spot when electric control cabinet is far away. When threading pipe (user owned) needs to be laid, confirm the inner diameter of the threading pipe according to the outer diameter of the cable.

9. Diagram and description of performance curve

Diagram of performance curve

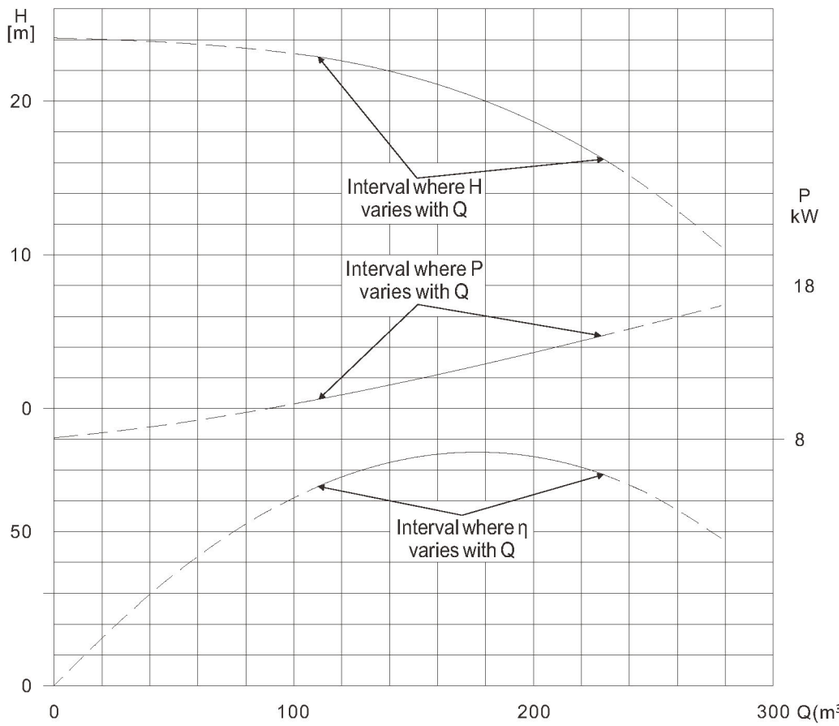

The solid line part of the curve in the figure represents the reasonable pump operation range where pump efficiency is relatively high and economical.

When pump is running below the leftmost side of the solid line:

(1) Under long-term low-flow operation, the pump will be always in a state of holding pressure with high pump temperature, excessive vibration and shortened life.When the deviation from the reasonable working range is large, the pump will be damaged to a certain extent after long-term operation.

(2) Large radial force will be generated,bearing and mechanical seal damage is accelerated,rolling keys or even shaft breakage risk will be caused.

(3) The efficiency will drop and electric energy will be wasted.

When pump is running higher than the rightmost side of the solid line: The pump will have problems like vibration, noise, cavitation, even over-current and motor burning , etc.

Installation dimension drawing

Dimension drawing of coupling installation Z

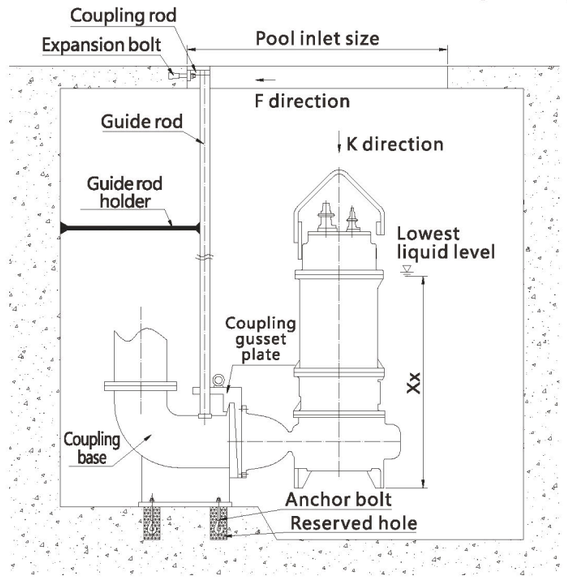

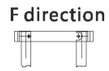

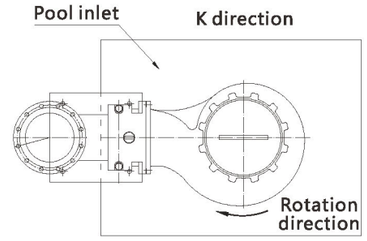

Flange implementation standard:GB/T17241.6

Hard pipe installation Y

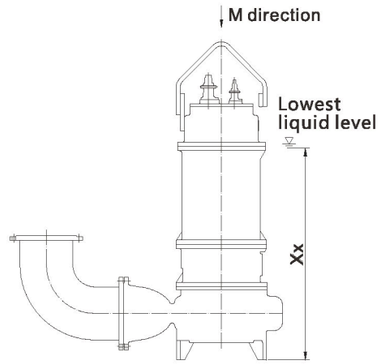

Soft pipe installation R

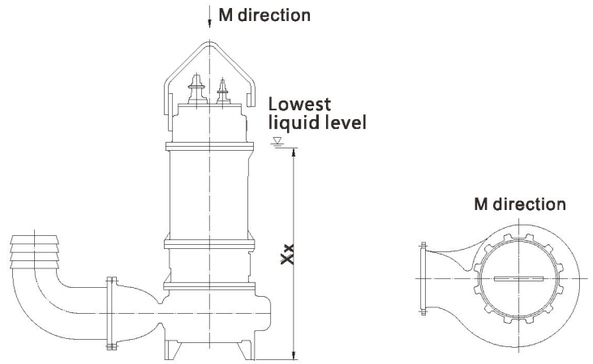

1. The coupling railings are all fixed with expansion bolts which implement JB/ZQ4763-2006 standard. When the length of guide rod is bigger than 5 meters, it is recommended that the user fix the guide rod every 3 meters.
2. Calculate guide rod length according to the "pool depth" shown on the figure, and refer to the attached table for the length.
3. △ indicates the minimum liquid level of pump operation. The pump operation liquid level should be higher than the minimum liquid level. It is best to submerge the pump completely under allowable site conditions, so that the motor can be fully cooled by the medium. The minimum liquid level can be controlled by float switch, ultrasonic level gauge, etc.
4. The dimension of coupling base and pump outlet flange shall comply with GB/T17241.6 standard.

Attachment list

Soft pipe joint

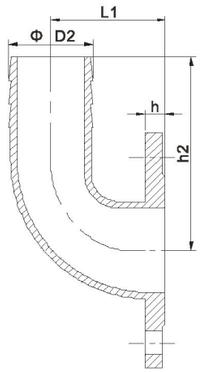

Flange dimension

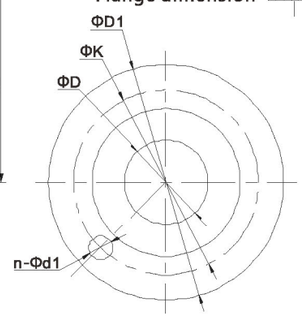

Hard pipe joint

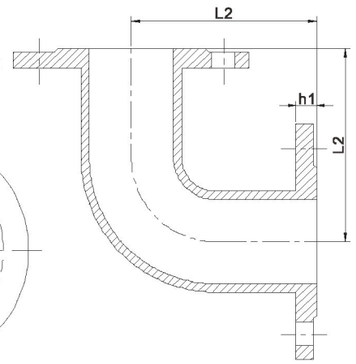

Flange dimension table (6kg)						Soft pipe joint			Hard pipe joint (flange joint)
D	D1	K	n-Φd1	h	h1	h2	D2	L1	L2
40	130	100	4-Φ14	11	14	100	41	60	100
50	140	110		12	16		50	65	110
65	160	130			18	135	63	75	120
80	190	150	4-Φ19	14	20	145	74	85	130
100	210	170		15		170	99	105	145
150	265	225	8-Φ19	18		200	149	135	220
200	320	280		20	22	290	198	180	315
250	375	335	12- Φ19	23	24	340	253	225	395

Flange dimension table (10kg)					Hard pipe joint (flange joint)
D	D1	K	n-Φd1	h1	L2
200	340	295	8 - Φ23	24	315
250	395	350	12 - Φ23	26	395
300	445	400	12 - Φ23	28	475
350	505	460	16 - Φ23	28	550
400	565	515	16 - Φ28	30	625
500	670	620	20 - Φ28	32	700

Anchor bolts (for coupling base)			Expansion bolt
Executive standard: (GB/T799-1988)/UDC621.882.6			Executive standard: JB/ZQ4763-2006
Diameter of Pump outlet(mm)	Model	Reference size of reserved hole Length × width × depth	Model
40	4-M12×220	80×80×300	2-M12×110
50	4-M16×320	80×80×350	
65			
80			
100			
150	4-M20×400	100×100×450	
200			
250			
300			
350			
400			
500	4-M24×500	150×150×600	2-M16×110

Specification and dimension of pump guide rod (seamless steel pipe/tap water pipe) Executive standard (GB/T17395-2008)			
Diameter of Pump outlet(mm)	Specifications and dimensions of guide rod	Height from coupling base guide rod to the bottom(mm)	Weight of Guide rod (kg)
40	1"/Φ33×3 (Outer diameter × wall thickness)	14	2.3kg/m
50			
65		16	
80	1.5"/Φ48×3 (Outer diameter × wall thickness)		3.33kg/m
100		18	
150		390	
200		440	
250		450	
300	2"/Φ60×3 (Outer diameter × wall thickness)	570	4.22kg/m
350		680	
400		775	
500	2.5"/Φ76×3.5(Outer diameter × wall thickness)	900	6.26kg/m
Reference length of guide rod=Pool depth-Height from coupling base guide rod to the bottom ± 20mm			

(Flange coupling) accessory weight table (standard HT200)			
Diameter of Pump outlet(mm)	Complete set of coupling(kg)	Soft pipe joint (kg)	Hard pipe joint (kg)
40	10	1.4	2.7
50	16	1.6	2.9
65	21	2.3	5.2
80	27	3.3	7.8
100	38	4.8	9.4
150	107	9.6	16
200	135	30.5	30
250	195	46	47
300	320	/	68
350	410		/
400	742		
500	780		

◎Note: The complete set of coupling includes coupling base, coupling gusset plate, coupling rod and does not include guide rails, hoisting chains, etc.

Steel short link chain and lifting chain executive standard: GB/T24814-2009 (grade 4 ordinary precision chain)

Optional table of grade 4 steel short link chains and lifting chains		
Nominal size of lifting chain (mm)	Nominal size × inner length × outer width (reference value)	Ultimate working load (t)
5	5×25×18	0.4
6.3	6.3×32×22	0.63
8	8×40×28	1
10	10×50×35	1.6
12.5	12.5×63×44	2.5
14	14×70×49	3.2
16	16×80×56	4
18	18×90×63	5
20	20×100×70	6.3
25	25×125×88	10
28	28×140×98	12.5

◎Note: 1. When customer chooses lifting chain, it needs to be selected according to the balance of more than 2 times of pump weight.(For safety, the balance needs to be increased when pump weight is more than 1 ton.)
2. There is no national standard for stainless steel (304, 316) lifting chains. If you need to purchase, you need to leave enough load margin to ensure safety.
3. If customers have special requirements, they can place an order with remarks separately.

◎Note: The default standard configuration is grade 4 precision.Order remarks are required if you need grade 8.

Standard wiring diagram of main control cable of WQA submersible sewage pump

Standard wiring diagram (3kW and below, with thermal protection): Y type(1 main cable)

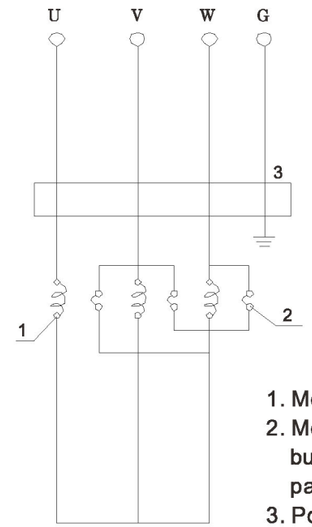

1. Motor coil
2. Motor protector is built-in normally closed passive switch
3. Power cord

Standard wiring diagram (4kW-315kW): internal delta type 4kW-15kW (1 main cable)

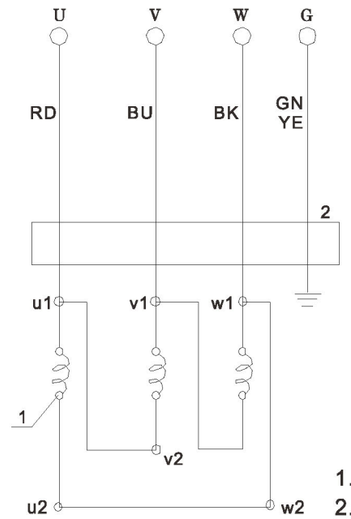

1. Motor coil
2. Power cord

18.5kW-37kW/4P 18.5kW-22kW/6P、8P
(1 main cable, 1 control cable)

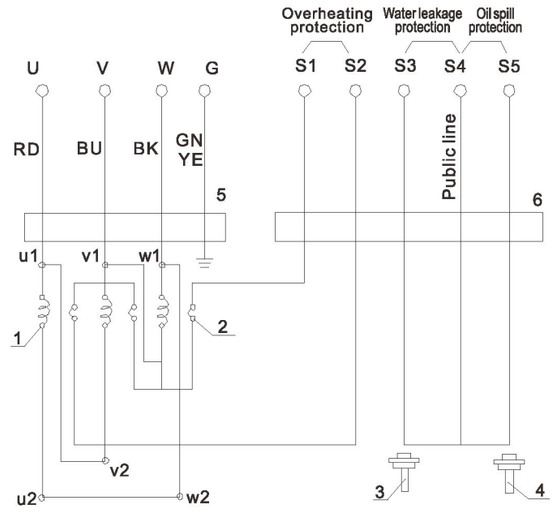

S1/S2 is the overheating protection line
S3 is the water leakage protection line
S4 is the public line
S5 is the oil leakage protection line

1. Motor coil
2. Motor protection device (thermistor), is a normally closed passive switch signal
3. Immersion detector (float switch), is a normally open passive switch signal
4. Oil leakage detector (electrode), is a normally open passive resistance signal
5. Power cord
6. Control cord

45kW-55kW/4P 30kW-90kW/6P、8P (1 main cable, 1 control cable)

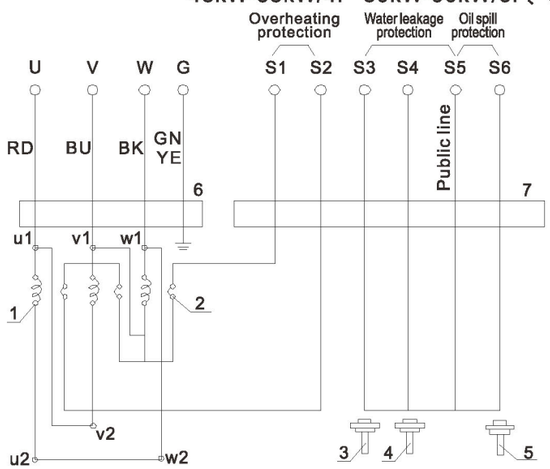

S1/S2 is the overheating protection line
S3/S4 is the water leakage protection line
S5 is the public line
S6 is the oil leakage protection line

1. Motor coil
2. Motor protection device (thermistor), is a normally closed passive switch signal
3. 4 . Immersion detector (float switch), is a normally open passive switch signal
5. Oil leakage detector (electrode), is a normally open passive resistance signal
6. Power cord
7. Control cord

18.5kW-37kW/2P 75kW-200kW/4P 110kW-200kW/6P 110kW-185kW/8P
(2 main cable, 1 control cable)

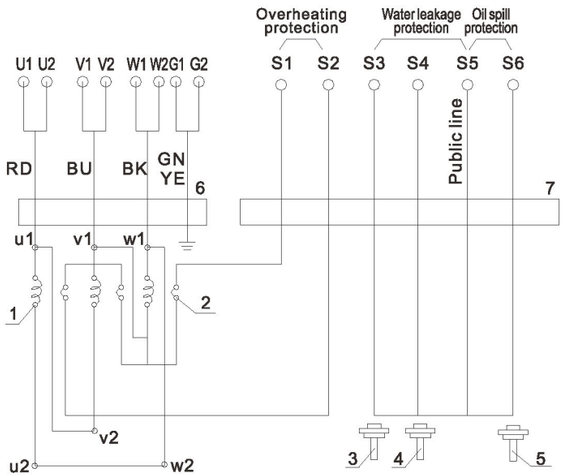

S1/S2 is the overheating protection line
S3/S4 is the water leakage protection line
S5 is the public line
S6 is the oil leakage protection line

1. Motor coil
2. Motor protection device (thermistor), is a normally closed passive switch signal
3. 4. Immersion detector (float switch), is a normally open passive switch signal
5. Oil leakage detector (electrode), is a normally open passive resistance signal
6. Power cord
7. Control cord

Note: U1 and U2 are combined into one line to connect to power supply of control cabinet.
V1 and V2 are combined into one line to connect to power supply of control cabinet.
W1 and W2 are combined into one line to connect to power supply of control cabinet.
G1 and G2 are combined into a line to connect to power supply of control cabinet.

220kW-280kW/4P 220kW-250kW/6P 200kW-250kW/8P
(3 main cable, 1 control cable)

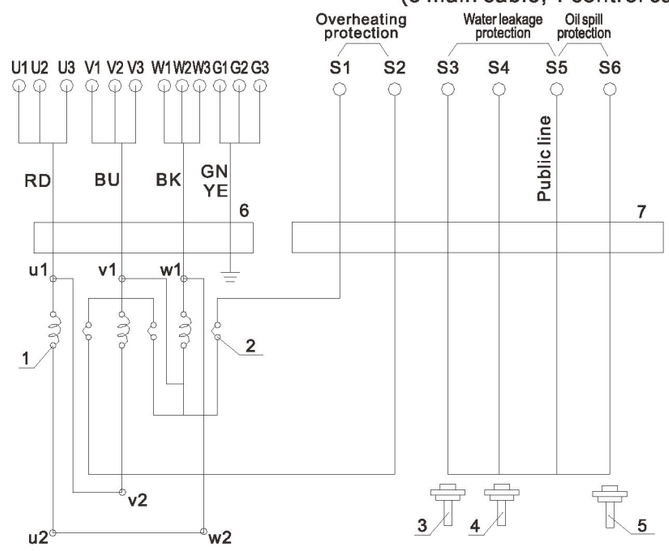

S1/S2 is the overheating protection line
S3/S4 is the water leakage protection line
S5 is the public line
S6 is the oil leakage protection line

1. Motor coil
2. Motor protection device (thermistor), is a normally closed passive switch signal
3. 4. Immersion detector (float switch), is a normally open passive switch signal
5. Oil leakage detector (electrode), is a normally open passive resistance signal
6. Power cord
7. Control cord

Note: U1. U2 and U3 are combined into one line to connect to power supply of control cabinet.
V1. V2 and V3 are combined into one line to connect to power supply of control cabinet.
W1. W2 and W3 are combined into one line to connect to power supply of control cabinet.
G1. G2 and G3 are combined into a line to connect to power supply of control cabinet.

280kW-315kW/6P、8P (4 main cable, 1 control cable)

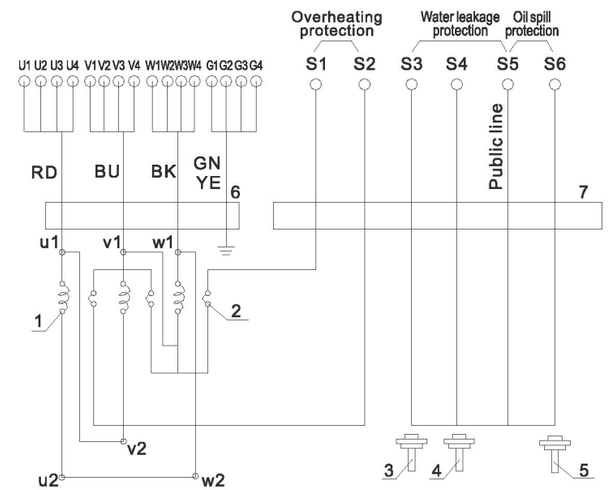

S1/S2 is the overheating protection line
S3/S4 is the water leakage protection line
S5 is the public line
S6 is the oil leakage protection line

1. Motor coil
2. Motor protection device (thermistor), is a normally closed passive switch signal
3. 4. Immersion detector (float switch), is a normally open passive switch signal
5. Oil leakage detector (electrode), is a normally open passive resistance signal
6. Power cord
7. Control cord

Note: U1. U2 and U3.U4 are combined into one line to connect to power supply of control cabinet.
V1. V2 and V3.V4 are combined into one line to connect to power supply of control cabinet.
W1. W2 and W3.W4 are combined into one line to connect to power supply of control cabinet.
G1. G2 and G3.G4 are combined into a line to connect to power supply of control cabinet.

Special monitoring device of WQA submersible sewage pump

1. Purpose and function

XIZI submersible pump monitoring device (comprehensive protector) is an optional accessory specially designed for submersible pump protection device by our company, to realize the comprehensive protection function of the submersible pump.

It has monitoring and protection functions of motor stator temperature overheating (overheating), oil chamber water leakage (oil and water),wiring cavity and motor cavity water leakage(water leakage). It can monitor 2 pumps at the same time.

2.Specifications and technical parameters



1. Specifications
   Length × width × height:115×90×40
   Installation size:105×70, 4-Φ5;or install on the rail
2. Working environment
   Ambient temperature:-20°C~50°C;
   Relative humidity≤85%RH;There is no corrosive gas in the surrounding environment
3. Power supply:AC220V 50Hz

3.Electrical principle and terminal wiring diagram

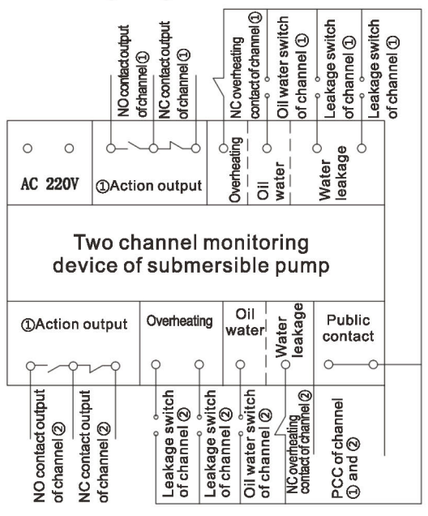

1. 220V access "AC 220V"
2. This product can monitor two water pumps at the same time. You can choose to connect to port ① or ② when there is only one pump.
3. The common wires of the "overheating", "oil water", "leaking" lead-out wires and the PCC lead-out wires, form the respective protection and monitoring circuits (Refer to schematic diagram).
4. "Action output" can be connected to "NO output" or "NC output" according to customer site.

4.Points for attention.

The inside of the monitoring device is full of electronic circuits, and the insulation resistance value cannot be measured with a megohmmeter.

Structure diagram of WQA products

Structure diagram for 7.5kW and below

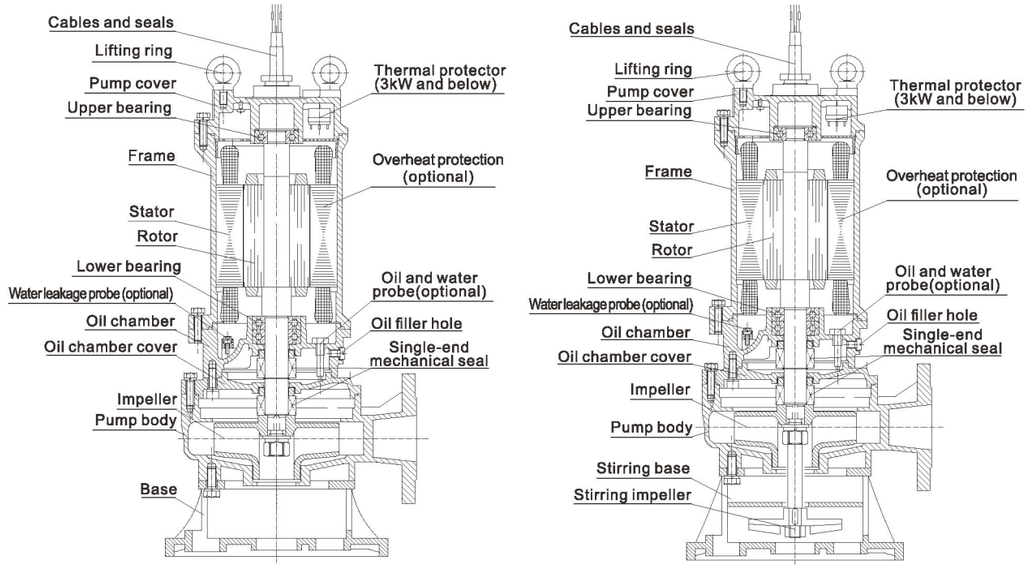

Structure diagram for 11kW and above

Cable: The water-jet cutting cable prevents accidental water immersion and adopts rubber flexible cable with good oil resistance and excellent mechanical performance.The pump end cable should be properly fixed to prevent dragging of the lead-out wire sealing device of the motor upper cover cable. Executive standard:JB/T8735.2 and GB/T5013.4

Motor: Dedicated squirrel cage induction motor, implementing standard GB755, protection grade is IP68, insulation grade (standard), H grade (optional).

Motor inspection hole: Located in the middle of the oil chamber, which can realize quick inspection and maintenance without disassembly.

Oil chamber: 32# engine oil is installed inside which has the function of lubricating mechanical seal and cooling. Executive standard:GB443-89

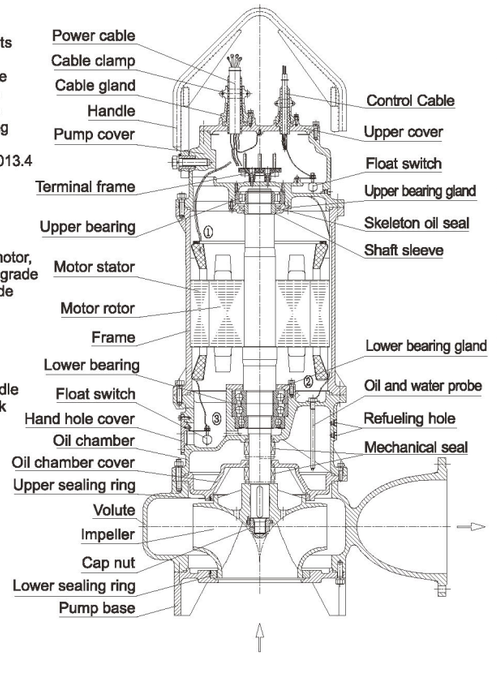

Flexible handle: using tripod lifting, the handle can be flexibly rotated, convenient, safe and firm.

Multiple detection and protection:PTC, oil-water probe and float switch can all realize real-time detection and functions like alarm, shutdown, fault signals retention and so on,to minimize the risk of failure. Refer to ①②③

Mechanical seal: Two independent single-end mechanical seals completely seal and isolate the motor and pump. It is installed in series up and down to realize double protection to ensure the safety of the motor.The designed service life of mechanical seal is 8,000 hours.

Bearings: Adopt various matching forms to ensure sufficient load margin to ensure smooth operation of the unit.The designed service life of the bearing is 10,000 hours.

Factory inspection: Every pump is tested before leaving the factory.
Executive standard: GB/T3216

Main materials and configuration table

WQA 7.5kW and below

No.	Name		Standard	Optional
1	Volute (pump body, pressurized water chamber)		Ht200	/
2	Impeller		HT200	304
3	Oil chamber cover		HT200	/
4	Oil chamber、Motor frame、Pump cover、Upper cover、Pump base		HT200	
5	Motor insulation class		F (155℃)	H (180℃)
6	Shaft		2Cr13	/
7	Bearing brand		Domestic	SKF、NSK
8	Mechanical seal	Brand	Domestic	Bergman
9		Motor side friction pair	Graphite/SiC AQ1	SiC/WC Q1U1
10		Pump side friction pair	SiC/WC Q1U1	/
11		Spring	Stainless steel	
12		Rubber parts	NBR	FKM
13	O-ring		NBR	FKM
14	External leakage fastener		8.8	A2-70
15	Protection device (optional)	0.55kW-7.5kW	/ Thermal protector for 3kW and below	Water leakage probe Float switch Overheating protection

WQA 11kW and above

No.	Name		Standard	Optional
1	Volute (pump body, pressurized water chamber)		HT250	QT
2	Impeller		HT250	304 QT
3	Oil chamber cover		HT250	QT
4	Oil chamber、Motor frame、Pump cover、Upper cover、Pump base		HT250	/
5	Motor insulation class		F (155℃)	H (180℃)
6	Shaft		2Cr13	/
7	Bearing brand		Domestic	SKF、NSK
8	Mechanical seal	Brand	Domestic	Bergman
9		Motor side friction pair	Graphite/SiC AQ1	SiC/WC Q1U1
10		Pump side friction pair	SiC/WC Q1U1	/
11		Spring	Stainless steel	
12		Rubber parts	NBR	FKM
13	O-ring		NBR	FKM
14	External leakage fastener		A2-70	/
15	Protection device	18.5kW-315kW (Standard) 11kW-15kW (Optional)	Water leakage probe Float switch Overheating protection	Optional bearing temperature and vibration sensor

Long-distance layout plan and cable specifications

Long-distance layout plan: When the control cabinet is far away from pump room, a terminal box can be installed, which makes the operation more convenient.

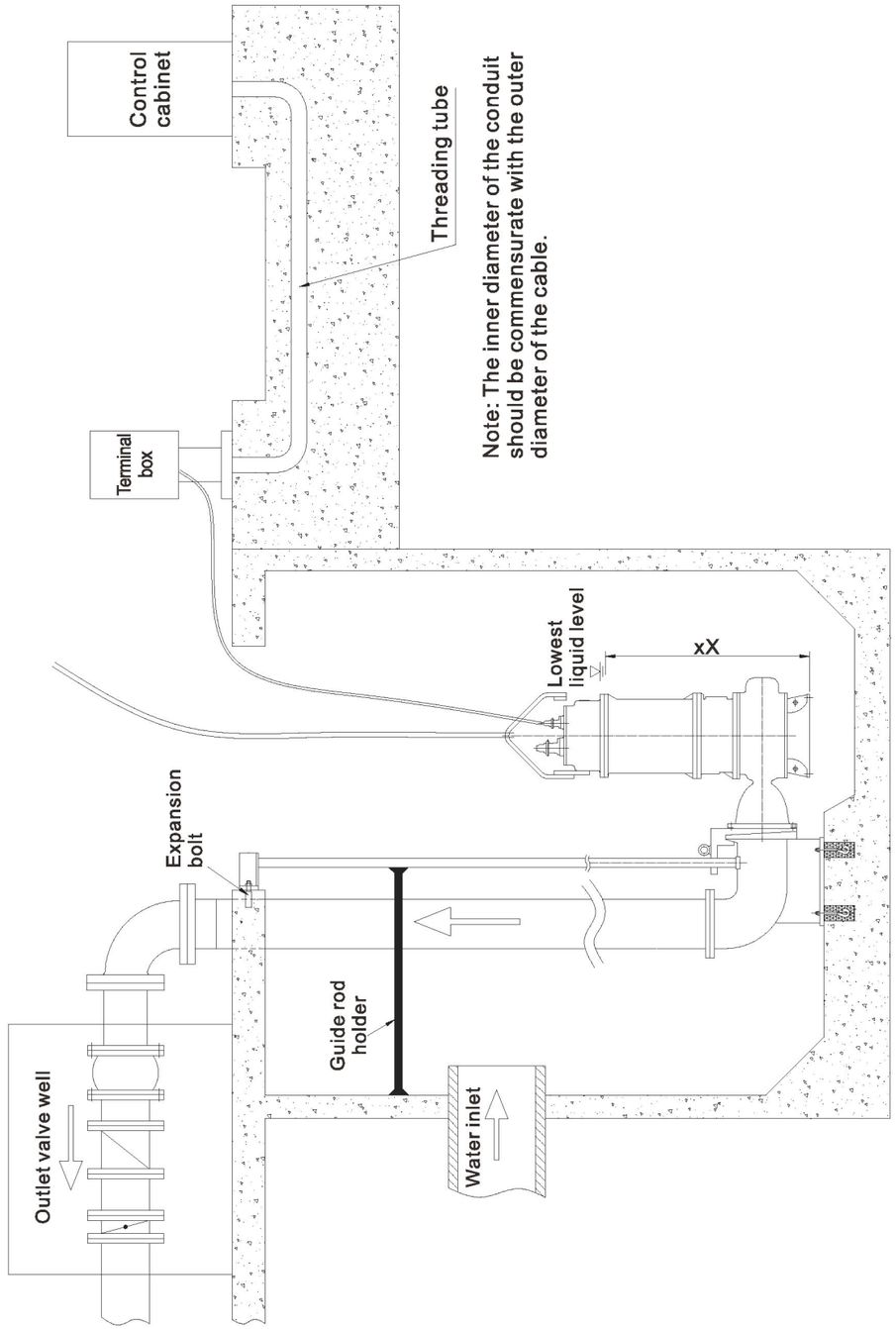

Specification/model of WQA submersible motor cable

Motor power(kW)	Cable model	Standard main cable specification	star delta	Specification/model of controlling cable
0.55	YZW 300/500V	YZW 4×0.75	/	YZW 4×0.75 (Non-standard)
0.75				
1.1				
1.5		YZW 4×1		
2.2				
3				
4		YZW 3×1.5+1×1		
5.5				
7.5		YZW 3×2.5+1×1		
11/15-2		YZW 3×6+1×4	2-YZW 3×2.5+1×1	YZW 4×1(Non-standard)
11/15-4/6			2-YZW 3×6+1×4	YZW 8×1(Non-standard)
18.5/22-2		2-YZW 3×6+1×4		YZW 8×1 (Standard)
18.5/22-4/6	YCW 450/750V	YCW 3×10+1×6		
30/37-2		2-YZW 3×6+1×4		
30-4/6/8		YCW 3×16+1×6	2-YCW 3×10+1×6	
37-4/6/8		YCW 3×25+1×10	2-YCW 3×16+1×6	
45-4/6				
45-8、55		YCW 3×35+1×10		
75-4		2-YCW 3×25+1×10		
90-4				
75-6/8		YCW 3×50+1×16	2-YCW 3×25+1×6	
90-6/8		YCW 3×70+1×25	2-YCW 3×35+1×10	
110		2-YCW 3×35+1×10		
132		2-YCW 3×50+1×16		
160-4/6		2-YCW 3×50+1×16	/	
160-8		2-YCW 3×70+1×25		
200-4/6、185				
200-8		3-YCW 3×50+1×16		
220-4/6/8				
250-4/6/8		3-YCW 3×70+1×25		
280-4				
280-6/8		4-YCW 3×50+1×16		
315-4/6/8				

Parameter table of WQA submersible motor

Parameter table of submersible motor(single-phase 220V 50Hz)

No.	Motor power (kW)	Pole number	Rated current A	Power factor cosψ	Motor efficiency %	Locked-rotor current A	Rated torque N.M	Locked-rotor torque
1	0.55	2	5. 2	0. 92	70	15	1. 88	1.7
2	0.75		5. 4	0. 92	72	20	2. 56	
3	1.1		7. 8	0. 95	75	30	3. 73	
4	1.5		10. 2	0. 95	76	45	5. 1	
5	2.2		14. 7	0. 95	77	65	7. 42	

Parameter table of submersible motor(three-phase 220V 50Hz)

No.	Motor power (kW)	Pole number	Rated current A	Power factor cosψ	Motor efficiency %	Locked-rotor current A	Rated torque N.M	Locked-rotor torque
1	0. 55	2	3. 2	0. 82	73	14. 03	1. 87	2.2
2	0. 75		3. 5	0. 83	75	18. 88	2. 53	
3	1. 1		4. 4	0. 84	77	30. 14	3. 71	
4	1. 5		6. 3	0. 84	79	40. 53	5. 03	
5	2. 2		8. 5	0. 85	81	56. 81	7. 38	
6	3		11	0. 87	83	79. 85	9. 96	

Parameter table of submersible motor(three-phase 380V 50Hz)

No.	Motor power (kW)	Pole number	Rated current A	Power factor cosψ	Motor efficiency %	Locked-rotor current A	Rated torque N.M	Locked-rotor torque
1	0. 55	2	1. 8	0. 82	73	8. 1	1. 87	2. 2
2	0. 75		2	0. 83	75	10. 9	2. 53	2. 2
3	1. 1		2. 5	0. 84	77	17. 4	3. 71	2. 2
4	1. 5		3. 6	0. 84	79	23. 4	5. 03	2. 2
5	2. 2		4. 9	0. 85	81	32. 8	7. 38	2. 2
6	3		6. 4	0. 87	83	46. 1	9. 96	2. 2
7	4		8. 2	0. 88	85	58. 7	13. 24	2. 2
8	5. 5	2	11	0. 88	86	80. 3	18. 09	2. 2
		4	12	0. 83	85	80. 5	36. 4	2. 3
9	7. 5	2	15	0. 88	87	106. 5	24. 66	2. 2
		4	16	0. 84	87	107. 1	49. 63	2. 3
10	11	2	22	0. 89	88	156. 8	35. 81	2. 2
		4	23	0. 84	88	155. 4	71. 85	2. 2
11	15	2	29	0. 89	89	209. 3	48. 84	2. 2
		4	30	0. 85	89	223. 5	97. 97	2. 2
		6	31	0. 81	91. 2	225. 6	147. 2	2
		8	34	0. 76	88	219. 8	196. 2	2

Parameter table of submersible motor(three-phase 380V 50Hz)

No.	Motor power (kW)	Pole number	Rated current A	Power factor cosψ	Motor efficiency %	Locked-rotor current A	Rated torque N.M	Locked-rotor torque
12	18.5	2	35	0. 9	90	254. 3	60. 24	2. 2
		4	36	0. 86	90. 5	270. 8	120. 4	2. 2
		6	37	0. 83	90. 7	275. 9	180. 7	2
		8	42	0. 76	88. 6	264. 7	242	1. 9
13	22	2	42	0. 9	90	303. 8	71. 38	2
		4	43	0. 86	91	319. 5	143. 2	2. 2
		6	44	0. 83	91. 2	331. 5	214. 9	2
		8	48	0. 78	89. 1	308. 9	287. 8	1. 9
14	30	2	58	0. 93	90. 3	364. 2	97	2. 2
		4	60	0. 86	92	411. 9	194. 7	2. 2
		6	61	0. 84	91. 5	408. 8	292	2
		8	63	0. 79	91	415. 8	389. 8	2
15	37	2	70	0. 88	93. 7	512. 2	119. 6	2
		4	71	0. 87	92	501. 2	239. 6	2. 2
		6	73	0. 86	91. 5	510	360. 6	2. 1
		8	78	0. 79	91. 5	502. 9	480. 7	2. 0
16	45	4	85	0. 87	92. 8	604. 8	290. 8	2. 2
		6	86	0. 86	92. 5	597. 8	438	2. 1
		8	94	0. 79	92	610. 5	584. 7	2. 0
17	55	4	104	0. 87	92. 6	741. 6	355. 8	2. 2
		6	105	0. 86	92. 4	723. 1	535. 4	2. 1
		8	114	0. 81	92. 3	728. 7	714. 6	1. 8
18	75	4	140	0. 87	93. 1	993. 6	483. 6	2. 2
		6	147	0. 86	93. 2	981. 4	726. 3	2
		8	152	0. 81	92. 8	977. 5	974. 5	1. 8
19	90	4	167	0. 89	93. 5	1050	580	2
		6	176	0. 87	93. 5	1008	870	1. 7
		8	180	0. 82	93. 1	1090	1161	1. 9
20	110	4	201	0. 88	94. 5	1200	710	1. 8
		6	206	0. 86	94. 5	1230	1066	1. 7
		8	217	0. 82	94. 1	1324	1420	1. 9
21	132	4	241	0. 88	94. 8	1395	850	1. 8
		6	244	0. 87	94. 5	1440	1280	1. 8
		8	260	0. 83	93. 3	1927	1703	1. 5
22	160	4	286	0. 9	94. 5	1800	1030	2. 1
		6	294	0. 88	94	1965	1550	1. 8
		8	314	0. 83	93. 3	2204	2064	1. 5

Parameter table of submersible motor(three-phase 380V 50Hz)								
No.	Motor power (kW)	Pole number	Rated current A	Power factor cosψ	Motor efficiency %	Locked-rotor currentA	Rated torque N.M	Locked-rotor torque
23	185	4	333	0. 9	94. 6	1947	1191	2. 0
		6	340	0. 88	94	2204	1792	1. 6
		8	362	0. 83	93. 8	2625	2380	1. 5
24	200	4	359	0. 9	94. 6	2112	1288	2
		6	368	0. 88	94	2484	1937	1. 6
		8	390	0. 83	93. 9	2835	2574	1. 5
25	220	4	396	0. 89	95	2758. 7	2132	2. 2
		6	404	0. 88	94. 2	2812	1419. 5	1. 8
		8	430	0. 83	93. 9	3118	2831	1. 6
26	250	4	445	0. 9	95	2664	1607	1. 7
		6	460	0. 88	94. 4	3105	2424	1. 8
		8	488	0. 83	94	3548	3218	1. 6
27	280	4	498	0. 9	95	2988	1800	1. 7
		6	510	0. 89	94. 4	3428	2715	1. 8
		8	548	0. 83	94	3975	3604	1. 6
28	315	4	560	0. 9	95	3360	2025	1. 7
		6	570	0. 89	94. 5	3735	3054	1. 8
		8	615	0. 83	94	4298	4457. 4	1. 6

Installation method

1. Fixed base installation (P):
Fix the base on the foundation, fix the base with anchor bolts, and connect the outlet pipe. It is inconvenient to repair the single pump after running;
2. Mobile installation (Y, R):
It is used for first aid or maintenance and construction, flexible and convenient to operate. It can be operated by connecting a hose or a hard pipe with the pump base support. It can also be suspended for use with a sufficiently rigid drainage pipeline.
3. Automatic coupling installation (Z):
The coupling device includes: coupling base, coupling gusset, guide rod, and coupling pull rod.
Automatic coupling installation: The coupling device links the pump and pipeline without fasteners, making the connection and disconnection of the pump and coupling base simple.
Operation essentials:
(1) Lay the cement foundation and reserve the anchor bolt holes according to the installation drawing.
(2)Fix the coupling base, coupling rod and guide rod, and the coupling base needs to be poured twice.
(3) Connect the coupling gusset plate and pump body flange with bolts. Whether to install or lift the pump, you only need to lift the lifting chain and let the gusset plate semi-circular hole slide along the guide rod.



The guide rod only bears the guiding force, this installation method is time-saving and effort-saving.

Order description

To make the pump you choose more in line with working site requirements, users are warmly welcome to call our technical department.
Please specify when ordering:
1. Pump model, flow, head, speed, power, motor power, medium temperature, medium composition, medium density
2. Parts material: pump body, impeller
3. Installation method, outlet diameter
4. Please specify starting method in the order if there are some requirements.
5. The standard water pump cable is 9 meters, specify it if other lengths are required.
6. The complete set of supply parts is provided according to the determined installation method.
7. Necessary parts, optional parts and spare parts need to be ordered separately.
8. Follow the principle of "spread before turning" when connecting the spinal canal and the elbow joint on the discharge pipeline.
9. Fill in the selection form.

No.	Pump model:	Configuration: standard Optional (specify in the order)
1	Flow: Q= m³/h	Starting method:
2	Head: H= m	Wiring method:
3	Pump immersion depth:h= m	Medium temperature :Normal ℃; Max ℃; Min ℃
4	Outlet diameter: mm	Corrosion component:
5	Insulation class: F(standard) H(optional)	Oxide concentration(PPM):
6	Motor rated power: kW	Sediment content:
7	Voltage on site: V	Maximum particle diameter: mm
8	Pump speed: r/min	Fiber type and length:
9	Frequency: Hz	Ambient temperature:Normal ℃; Mak ℃; Min ℃

Supply list

Supply list		Installation method				
		Automatic coupling installation(Z)	Fixed base installation (P)	Hard pipe mobile installation(Y)	Soft pipe mobile installation(R)	Single pump
Complete supply parts	Pump (9-meter cable)	✓	✓	✓	✓	✓
	Coupling base	✓				
	Gusset plate	✓				
	Coupling rod	✓				
	Pump base (1pc/set)	✓	✓	✓	✓	✓
Essential parts	Guide rod	✓				
	Anchor bolt	✓	✓			
	Expansion bolt	✓				
	Hard pipe (1 pc/set)		✓	✓		
	Soft pipe (1 pc/set)				✓	
Optional parts	Submersible pump monitoring device	✓	✓	✓	✓	✓
	Stainless steel wire rope and rope clamp for lifting pump	✓	✓	✓	✓	✓
	Spinal tube	✓	✓	✓	✓	✓
	Mating flange	✓	✓	✓		✓
	Flange joint		✓	✓		✓
	Gate valve/butterfly valve	✓	✓	✓	✓	✓
	Check valve	✓	✓	✓	✓	✓
	Electric control cabinet	✓	✓	✓	✓	✓
	Terminal box	✓	✓	✓	✓	✓
	Float switch (liquid level)	✓	✓	✓	✓	✓
Spare parts	Impeller	✓	✓	✓	✓	✓
	Bearing	✓	✓	✓	✓	✓
	Mechanical seal	✓	✓	✓	✓	✓
	Seal ring	✓	✓	✓	✓	✓
	O-ring seal	✓	✓	✓	✓	✓

WQA50Hz performance curve chart

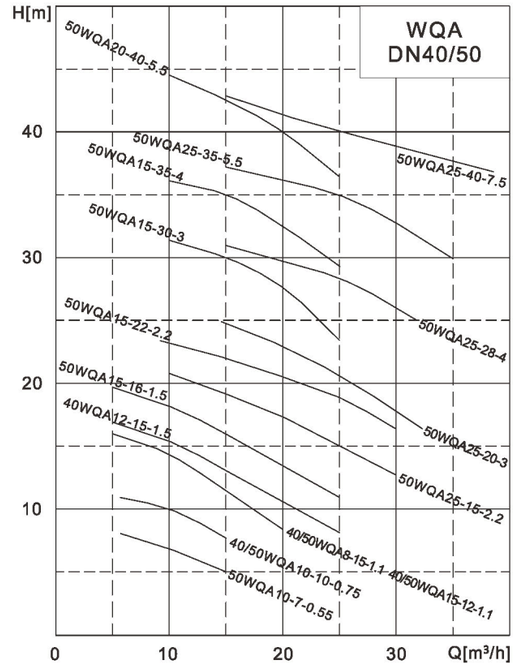

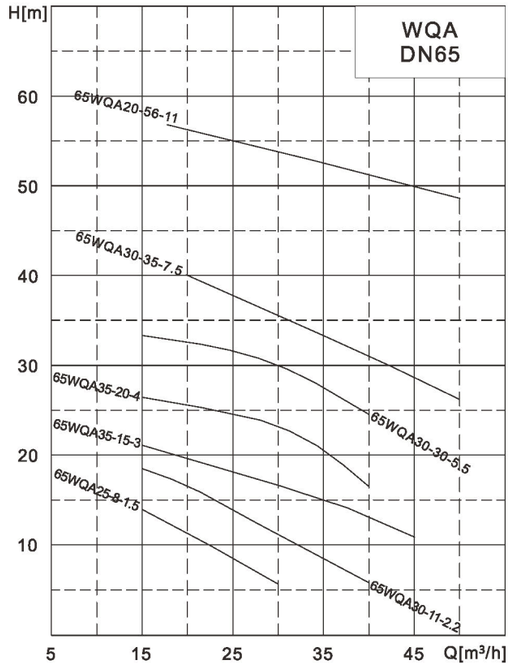

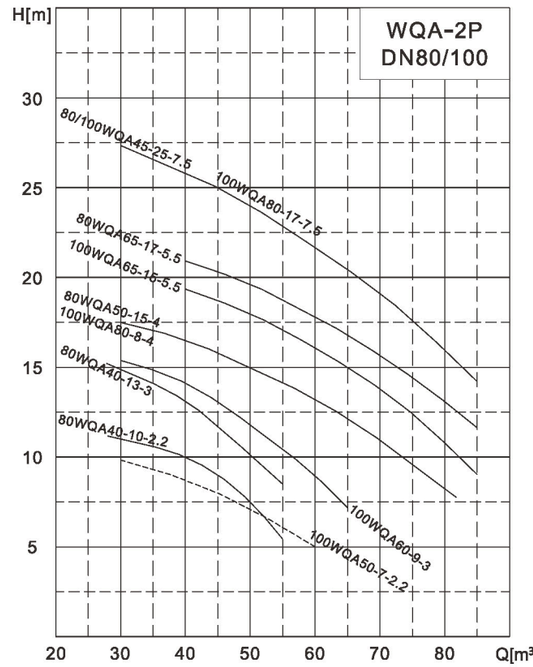

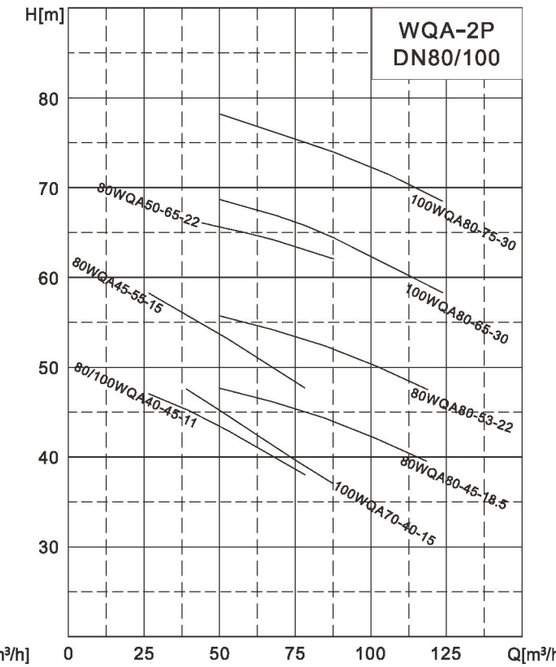

WQA50Hz performance curve chart

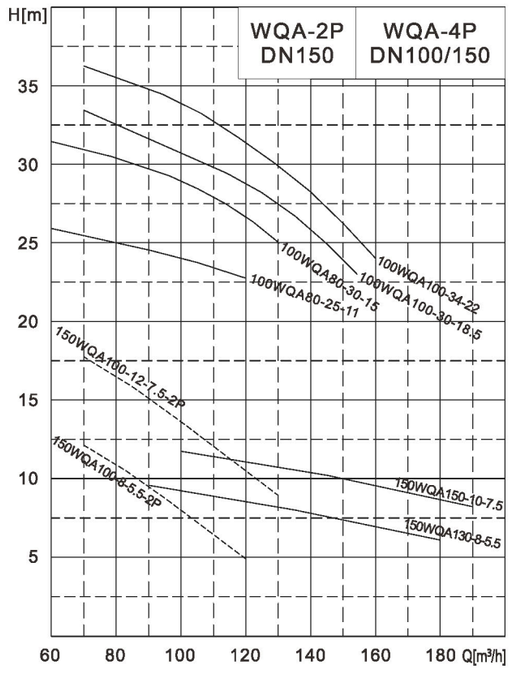

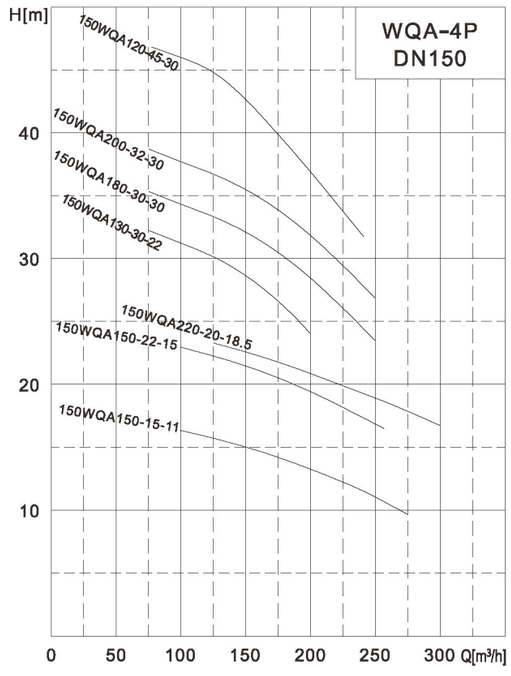

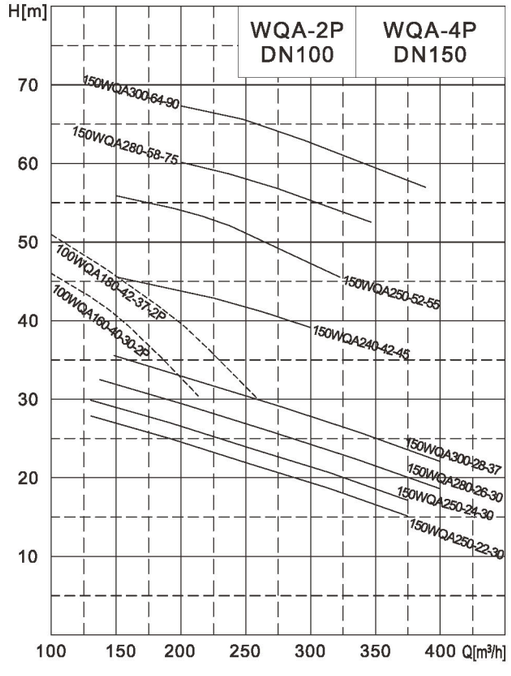

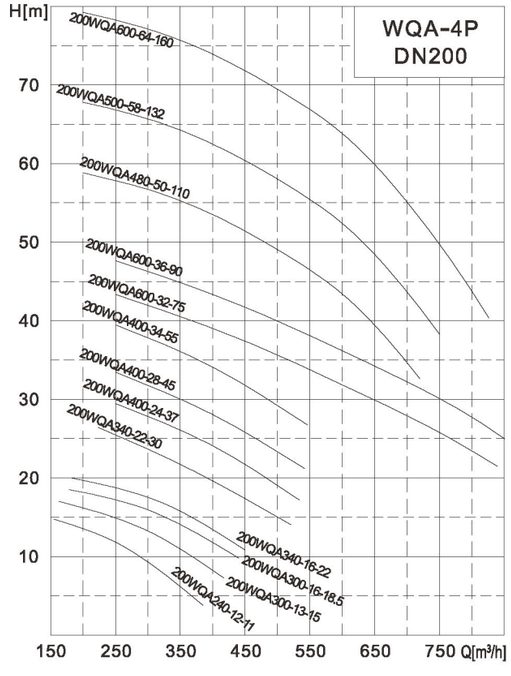

WQA50Hz performance curve chart

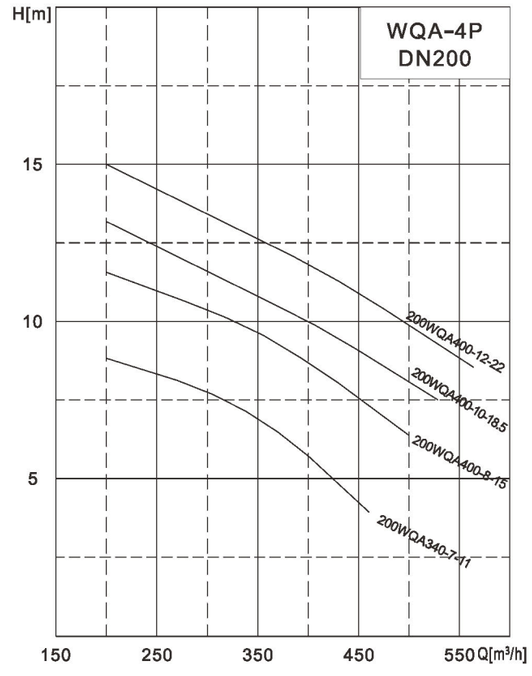

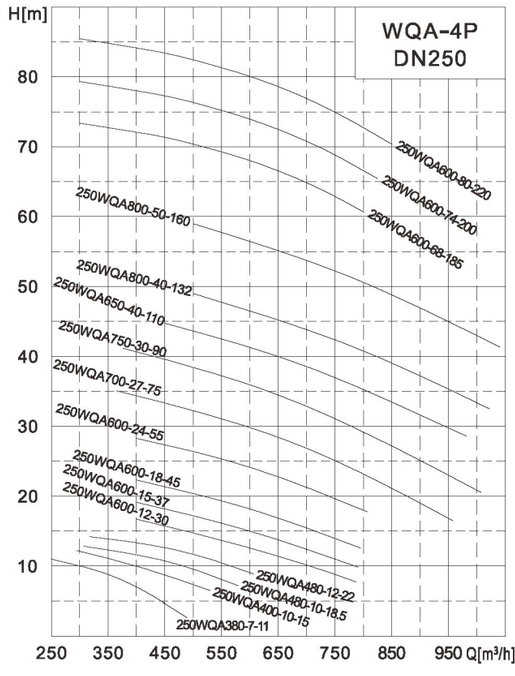

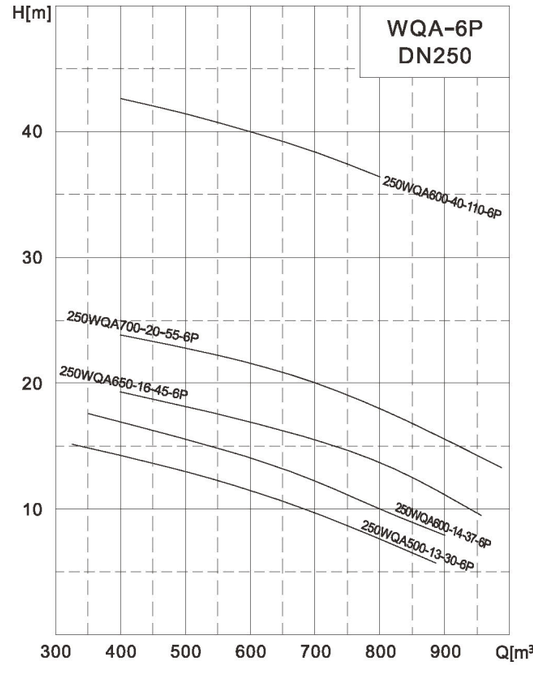

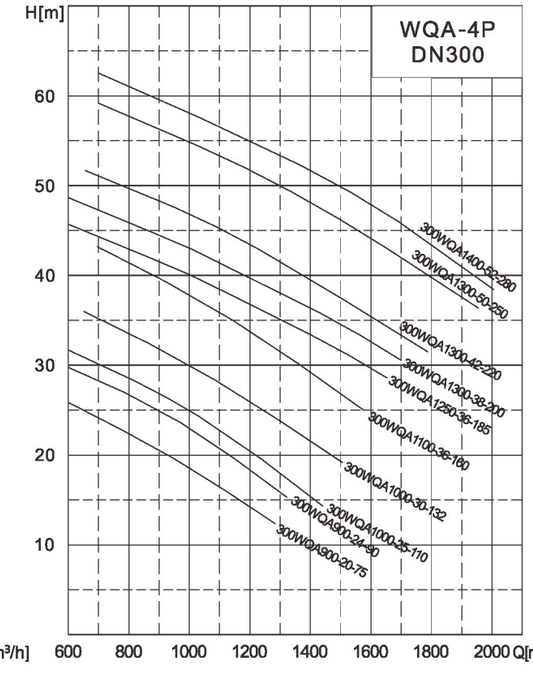

WQA50Hz performance curve chart

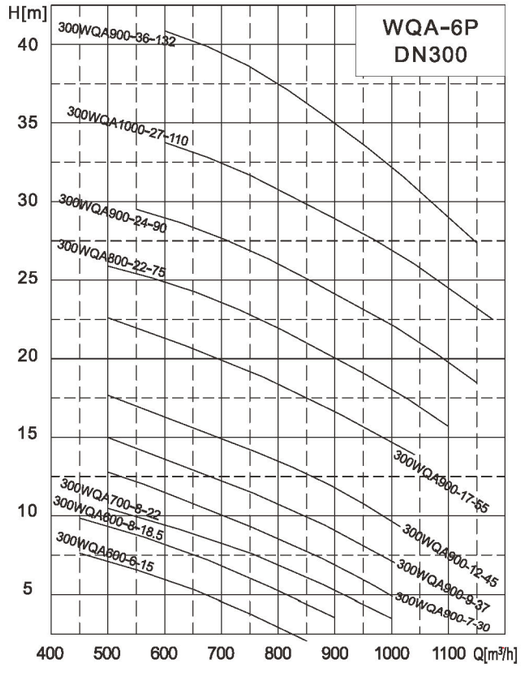

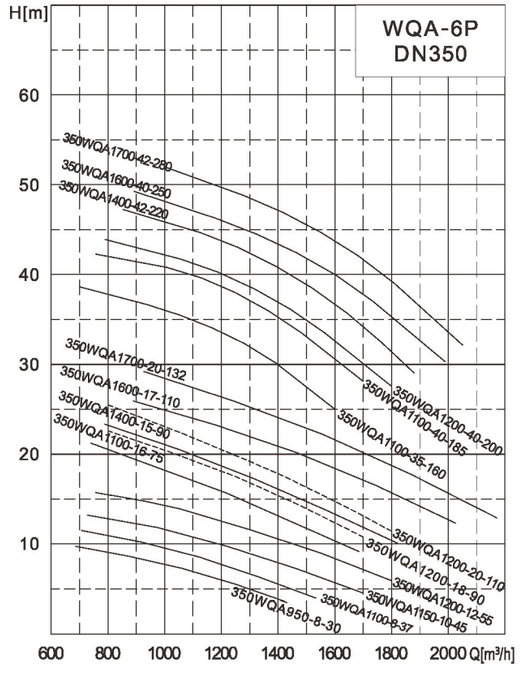

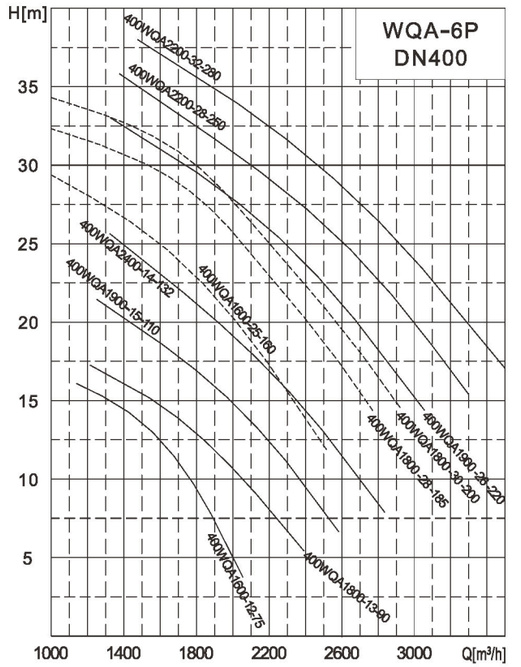

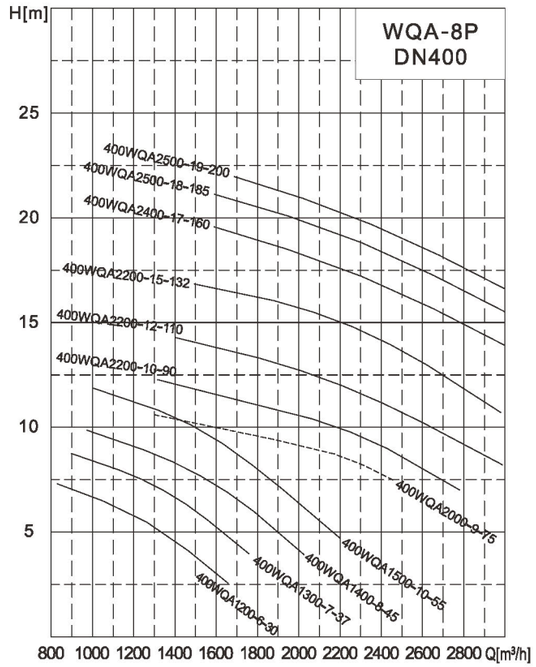

WQA50Hz performance curve chart

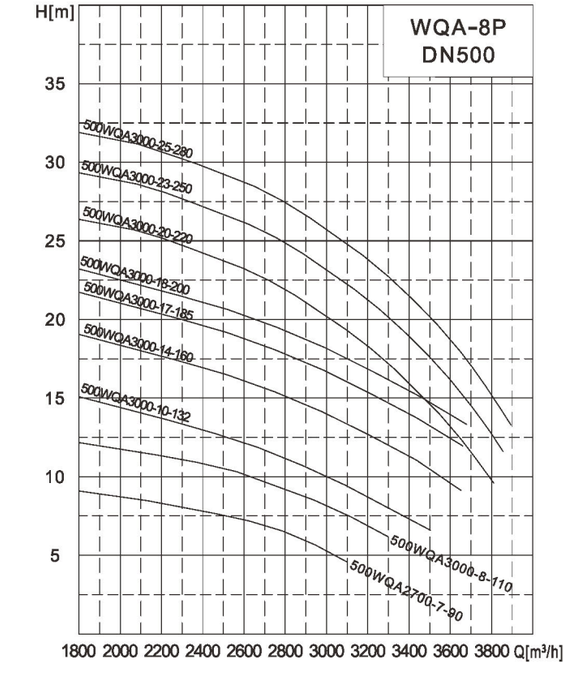

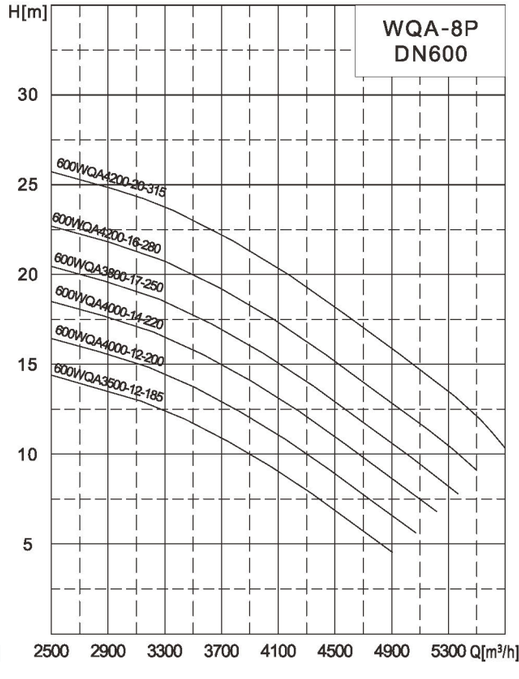

WQA installation dimension drawing

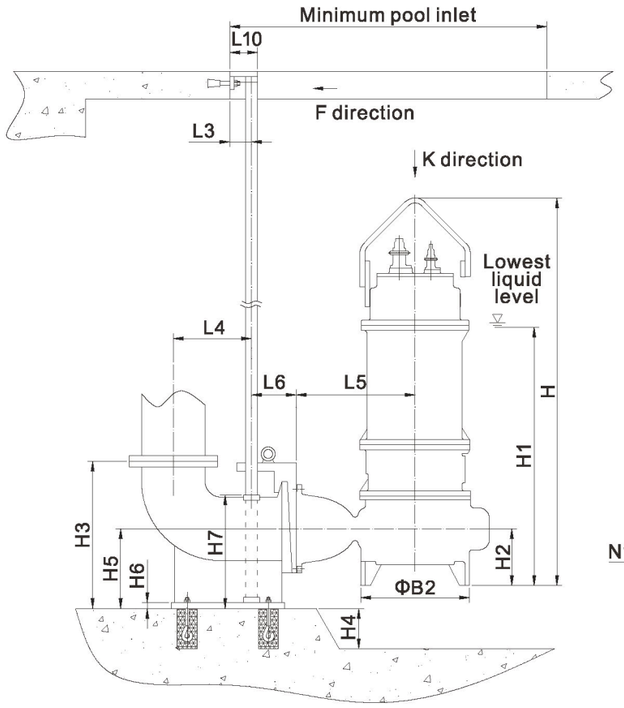

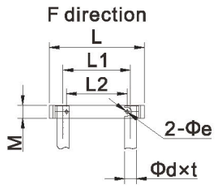

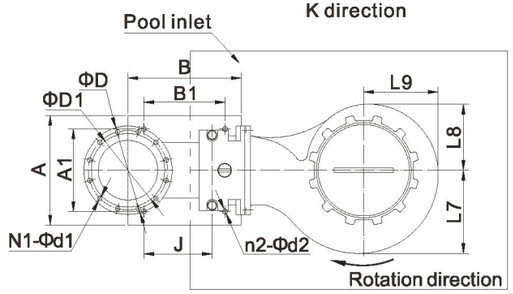

Flange implements GB/T17241.6 standard

Flange coupling parts dimension table

No.	Model	Flange Connection Size			Coupling Base Size						H3	H4	H5	H6	H7	L	L1	L2	M	Φe	L3	L4	L6	L10	Φd×t (Outer diameter ×Wall thickness)
		D	D1	N1-Φd1	A	A1	B	B1	J	n2-Φd2															
1	40	130	100	4-Φ14	108	65	138	68	68	4-Φ15	195	Adjust according to pump model	120	14	150	225	185	70	35	Φ14	65	125	85	13	Φ33×3
2	50	140	110		197	168	208	130	120	4-Φ19	250		165		/	265	215	110	42		66	135	90	15	
3	65	160	130		238	190	252	155	135		265		170	16		280	235	125	50		70	185	85	18	
4	80	190	150	4-Φ19	255	220	225	153	125		310		190			315	265	145	53		80	155	100	18	Φ48×3
5	100	210	170		293	265	258	175	140		350		235	18		365	305	170	55	Φ15	100	200	110	20	
6	150	265	225	8-Φ19	400	285	410	300	210	4-Φ22	485		300	22	390	410	260	285	60			290	190	20	
7	200	320	280			300	445	350	250	4-Φ25	550		325		440							330	195	20	
8	250	375	335	12-Φ19	460	360	555	430	325		635		310	24	450							395	215	20	
9	300	445	400	12-Φ23	550	415	570	410	345		740		400	30	570	480	305	340	65		110	395	225	23	Φ60×3
10	350	505	460	16-Φ23	580	420	615	400	350		860		490	33	680	500	320	360			115	435	230	25	
11	400	565	515	16-Φ28	630	490	665	510	430		960		560	36	775							480	235	25	
12	500	670	620	20-Φ28	732	570	752	550	475	4-Φ28	1160		655	38	900	750	660	460	78	Φ20		565	250	26	Φ76×3.5
13	600	780	725	20-Φ31	830	720	850	700	590	4-Φ33	1320		710	40	1020	830	740	560				660	275	30	

Pump appearance and mobile installation

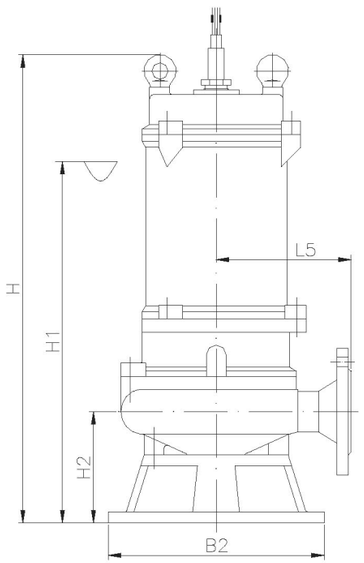

Dimension drawing of pump appearance

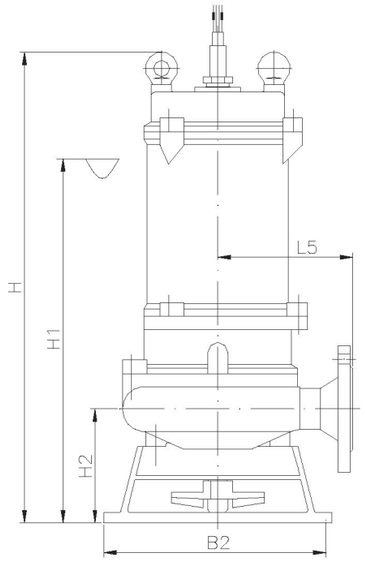

Dimension drawing of Stirring (JY) pump

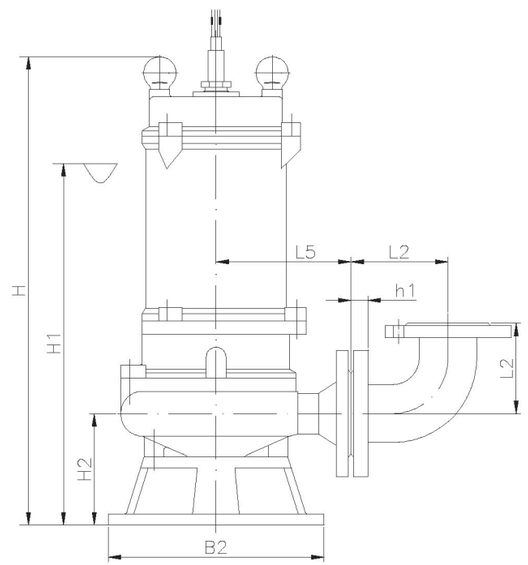

Hard pipe(double flange joint/elbow) mobile installation

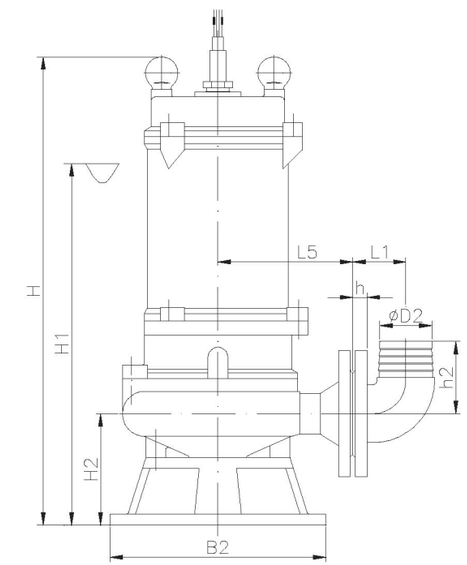

Soft pipe(joint) mobile installation

WQA installation dimension table

WQA sewage pump series

No.	WQA model	Diameter	Power	Rotating speed	Voltage	Passable particle diameter D	Appearance dimension table(mm)								Weight	Pressure grade of pump outlet flange
		mm	kw	r/min	V	mm	L5	B2	H	H1	H2	L8	L9	L7	kg	kg
1	40WQA10-10-0.75	40	0.75	2950	220/380	20	135	200	460	380	110	90	95	100	23	6
2	40WQA8-15-1.1		1.1												24	
3	40WQA15-12-1.1														25	
4	40WQA12-15-1.5		1.5				150	240	490	400	125	100	110	115	29	
5	50WQA10-7-0.55	50	0.55				135	200	460	380	110	90	95	100	23	
6	50WQA10-10-0.75		0.75												24	
7	50WQA8-15-1.1		1.1												25	
8	50WQA15-12-1.1															
9	50WQA15-16-1.5		1.5				145	230	545	455	120	105	95	105	29	
10	65WQA25-8-1.5	65	2.2			25	160	230	570	480	125	105	110	115		
11	50WQA15-22-2.2	50					150	230	580	490	120	105	100	110	38	
12	50WQA25-15-2.2														37	
13	65WQA30-11-2.2	65					160	230	590	500	125	105	110	115	38	
14	80WQA40-10-2.2	80					170	230	605	515	130	110	110	125	41	
15	100WQA50-7-2.2	100				30	180	230	605	515	130	105	125	140	43	
16	50WQA15-30-3	50	3		380	25	150	230	590	500	120	105	110	115	43	
17	50WQA25-20-3															
18	50WQA15-35-4		4			20	170	260	635	535	140	120	110	120	61	
19	50WQA25-28-4															
20	50WQA20-40-5.5		5.5				180	260	665	565	140	115	110	125	68	
21	50WQA25-35-5.5															
22	50WQA25-40-7.5		7.5				190	320	730	620	155	135	125	135	95	
23	65WQA35-15-3	65	3			25	155	230	595	505	125	105	110	115	44	
24	65WQA35-20-4		4				170	260	625	525	140	115	115	120	62	
25	65WQA30-30-5.5		5.5						665	565					69	
26	65WQA30-35-7.5		7.5				195	320	735	620	160	135	130	135	97	
27	80WQA40-13-3	80	3				180	230	610	520	130	110	120	135	44	
28	80WQA50-15-4		4			30	175	260	650	550	145	115	125	130	63	
29	80WQA65-17-5.5		5.5						665	565					74	
30	80WQA45-25-7.5		7.5			35	205	320	750	640	165	135	135	145	100	
31	100WQA60-9-3	100	3				180	230	610	520	130	105	125	140	55	
32	100WQA80-8-4		4				180	260	655	555	150	120	130	150	64	
33	100WQA65-15-5.5		5.5						685	585					76	
34	100WQA80-17-7.5		7.5			30	215	320	765	650	175	135	155	170	103	
35	100WQA45-25-7.5															
36	150WQA100-8-5.5	150	5.5			35	200		720	610			145		125	
37	150WQA100-12-7.5		7.5						765	650					140	
38	150WQA130-8-5.5		5.5	1475		40	275	320	693	585	171	178	201	225	135	
39	150WQA150-10-7.5		7.5												145	

WQA installation dimension table

No.	WQA model	Diameter	Power	Rotating speed	Voltage	Passable particle diameter D	Appearance dimension table(mm)								Weight	Pressure grade of pump outlet flange	Full-head?
		mm	kw	r/min	V	mm	L5	B2	H	H1	H2	L8	L9	L7	kg	kg	
1	65WQA20-56-11	65	11	2950	380	20	220	320	800	600	160	145	155	160	153	6	NO
	80WQA40-45-11	80	11				240								155		
	80WQA45-55-15		15						830	630					160		
2	80WQA80-45-18.5	80	18.5	2950		15	280	300	1170	880	155	155	160	175	246	6	
	80WQA50-65-22		22												255		
	80WQA80-53-22														255		
3	100WQA40-45-11	100	11	2950		20	240	320	800	600	160	145	155	160	162	6	
	100WQA70-40-15		15						830	630					172		
4	100WQA80-25-11	100	11	1475		50	340	380	1120	830	205	210	220	230	263	6	
	100WQA80-30-15		15												286		
	100WQA100-30-18.5		18.5						1380	880					363		
	100WQA100-34-22		22												379		
5	100WQA80-75-30	100	30	2950		15	280	300	1170	880	155	155	160	175	295	6	
	100WQA80-65-30														295		
	100WQA80-60-30														295		
6	100WQA160-40-30	100	30	2950		40	300	280	1190	900	170	165	185	205	300	6	
	100WQA180-42-37		37												310		
7	150WQA150-15-11	150	11	1475		60	360	380	1140	850	210	210	230	250	275	10	YES
	150WQA150-22-15		15												300		
	150WQA220-20-18.5		18.5						1390	890					375		
8	150WQA130-30-22	150	22	1475		50	385	380	1380	880	205	220	235	255	390		NO
9	150WQA120-45-30	150	30	1475		50	440	300	1550	970	220	245	255	265	630	6	
	150WQA200-32-30		30												630		
	150WQA180-30-30		30												630		
10	150WQA280-26-30	150	30	1475		50	440	300	1540	960	205	250	275	290	630	6	
	150WQA250-24-30		30												630		
	150WQA250-22-30		30												630		
	150WQA300-28-37		37												665		
11	150WQA240-42-45	150	45	1475		55	500	400	1630	1050	210	260	275	290	720	6	
	150WQA250-52-55		55												755		
12	150WQA280-58-75	150	75	1475		50	540	400	1880	1210	240	300	320	335	1009	10	
	150WQA300-64-90		90												1085		

WQA installation dimension table

No.	WQA model	Diameter	Power	Rotating speed	Voltage	Passable particle diameter D	Appearance dimension table(mm)								Weight	Pressure grade of pump outlet flange	Full-head?
		mm	kw	r/min	V	mm	L5	B2	H	H1	H2	L8	L9	L7	kg	kg	
13	200WQA340-7-11	200	11	1475	380	80	420	380	1180	890	245	240	280	310	295	10	YES
	200WQA400-8-15		15												315		
	200WQA400-10-18.5		18.5						1430	930					380		
	200WQA400-12-22		22												395		
14	200WQA240-12-11	200	11	1475		85	420	300	1130	830	205	230	270	300	293	6	
	200WQA300-13-15		15												315		
	200WQA300-16-18.5		18.5						1375	870					380		
	200WQA340-16-22		22												395		
15	200WQA340-22-30	200	30	1475		80	460	400	1560	980	215	250	280	310	655	6	NO
	200WQA400-24-37		37												682		
	200WQA400-28-45		45						1640	1060					738		
	200WQA400-34-55		55												771		
16	200WQA600-32-75	200	75	1475		80	560	400	1900	1230	235	305	340	365	1070	6	
	200WQA600-36-90		90												1145		
17	200WQA480-50-110	200	110	1475		75	550	400	2150	1390	270	325	340	360	1585	10	
	200WQA500-58-132		132												1652		
	200WQA600-64-160		160						2270	1510					1757		
18	250WQA380-7-11	250	11	1475		75	450	460	1140	850	225	250	300	335	305	6	YES
	250WQA400-10-15		15												325		
	250WQA480-10-18.5		18.5						1390	890					388		
	250WQA480-12-22		22												405		
19	250WQA600-12-30	250	30	1475		80	530	400	1570	990	210	265	315	360	672	6	
	250WQA600-15-37		37												700		
	250WQA600-18-45		45						1650	1070					755		
	250WQA600-24-55		55												788		
20	250WQA500-13-30	250	30	980		70	560	475	1640	1060	270	290	320	360	690	10	NO
	250WQA600-14-37		37						1720	1140					720		
21	250WQA650-16-45	250	45	980		90	570	550	1970	1300	285	300	335	370	975		
	250WQA700-20-55		55												1024		
22	250WQA700-27-75	250	75	1475		85	520	460	1935	1270	255	280	315	345	1095	6	YES
	250WQA750-30-90		90												1170		
23	250WQA600-40-110	250	110	980		40	630	650	2280	1530	270	370	420	445	1865	10	NO
24	250WQA650-40-110	250	110	1475		100	660	460	2180	1430	280	325	360	390	1615	6	
	250WQA800-40-132		132												1685		
	250WQA800-50-160		160						2300	1550					1788		

WQA installation dimension table

No.	WQA model	Diameter	Power	Rotating speed	Voltage	Passable particle diameter D	Appearance dimension table(mm)								Weight	Pressure grade of pump outlet flange	Full-head?
		mm	kw	r/min	V	mm	L5	B2	H	H1	H2	L8	L9	L7	kg	kg	
25	250WQA600-68-185	250	185	1475	380	70	600	460	2270	1510	250	350	380	405	1855	10	NO
	250WQA600-74-200		200												1896		
	250WQA600-80-220		220												1923		
26	300WQA600-6-15	300	15	980		90	575	500	1450	950	255	325	380	440	510	10	YES
	300WQA600-8-18.5		18.5						1500	1000					542		
	300WQA700-8-22		22												558		
27	300WQA900-7-30	300	30	980		90	600	550	1705	1120	285	340	380	425	707	10	
	300WQA900-9-37		37						1785	1200					737		
	300WQA900-12-45		45						1970	1300					983		
	300WQA900-17-55		55												1035		
28	300WQA800-22-75	300	75	980		70	700	650	2180	1420	270	415	475	525	1635	10	
	300WQA900-24-90		90												1721		
	300WQA1000-27-110		110						2300	1540					1891		
29	300WQA900-36-132	300	132	980		45	630	650	2280	1530	270	400	435	475	1997		
30	300WQA900-20-75	300	75	1475		120	565	525	1985	1320	275	325	390	440	1100	10	
	300WQA900-24-90		90												1175		
31	300WQA1000-25-110	300	110	1475		100	670	525	2205	1450	285	350	400	445	1650	10	
	300WQA1000-30-132		132												1717		
	300WQA1100-36-160		160						2325	1570					1840		
32	300WQA1250-36-185	300	185	1475		70	650	525	2280	1520	265	375	425	470	1910	10	NO
	300WQA1300-38-200		200												1950		
	300WQA1300-42-220		220												1975		
	300WQA1300-50-250		250						2410	1650					2236		
	300WQA1400-52-280		280												2340		
33	350WQA950-8-30	350	30	980		110	740	520	1670	1080	275	410	480	545	792	10	YES
	350WQA1100-8-37		37						1750	1160					871		
	350WQA1150-10-45		45						1970	1300					1055		
	350WQA1200-12-55		55												1105		
34	350WQA1200-18-90	350	90	980		100	700	650	2180	1420	270	415	475	525	1610	10	
	350WQA1200-20-110		110						2300	1540					1812		
35	350WQA1100-16-75	350	75	980		130	850	625	2210	1450	295	445	515	575	1668	10	
	350WQA1400-15-90		90												1755		
	350WQA1600-17-110		110						2330	1570					1927		
	350WQA1700-20-132		132												2032		

WQA installation dimension table

No.	WQA model	Diameter	Power	Rotating speed	Voltage	Passable particle diameter D	Appearance dimension table(mm)							Weight	Pressure grade of pump outlet flange	Full-head?
		mm	kw	r/min	V	mm	L5	B2	H	H1	H2	L8	L9	L7	kg	
36	350WQA1100-35-160	350	160	980	380	55	800	750	2730	1800	355	450	500	540	2570	10	YES
	350WQA1100-40-185		185												2620		
	350WQA1200-40-200		200												2675		
	350WQA1400-42-220		220												2800		
	350WQA1600-40-250		250												2990		
	350WQA1700-42-280		280												3070		
37	400WQA1600-12-75	400	75	980		120	850	650	2280	1520	350	495	565	635	1766	10	
	400WQA1800-13-90		90						2400	1640					1855		
	400WQA1900-15-110		110												2024		
	400WQA2400-14-132		132												2130		
38	400WQA1600-25-160	400	160	980		120	860	650	2750	1820	330	490	560	615	2620	10	
	400WQA1800-28-185		185												2670		
	400WQA1800-30-200		200												2730		
39	400WQA1900-26-220	400	220	980		150	850	670	2800	1870	335	470	555	635	2850	10	
	400WQA2200-28-250		250												2995		
	400WQA2200-32-280		280												3070		
40	400WQA1200-6-30	400	30	740		100	850	660	1960	1290	350	500	580	650	1700	10	
	400WQA1300-7-37		37												1737		
	400WQA1400-8-45		45						2060	1390					1816		
	400WQA1500-10-55		55												1910		
41	400WQA2000-9-75	400	75	740		100	800	800	2400	1640	435	475	575	655	2050	10	
	400WQA2200-10-90		90						2520	1760					2350		
	400WQA2200-12-110		110						2910	1990					2680		
	400WQA2200-15-132		132												2735		
	400WQA2400-17-160	400	160	740		100	800	800							3000		
	400WQA2500-18-185		185												3200		
	400WQA2500-19-200		200												3400		
42	500WQA2700-7-90	500	90	740		100	800	800	2520	1760	435	475	575	655	2330	10	
	500WQA3000-8-110		110						2910	1990					2390		
	500WQA3000-10-132	500	132												2780		
	500WQA3000-14-160		160												3130		
	500WQA3000-17-185		185												3210		
	500WQA3000-18-200		200												3290		
43	500WQA3000-20-220	500	220	740		95	1000	800	2770	1840	365	620	710	790	3470	10	
	500WQA3000-23-250		250						2950	2020					3550		
	500WQA3000-25-280		280												3740		
44	600WQA3500-12-185	600	185	740		150	960	870	2950	2020	460	570	690	785	3380	10	
	600WQA4000-12-200		200												3460		
	600WQA4000-14-220		220												3640		
	600WQA3800-17-250		250												3720		
	600WQA4200-16-280		280												3910		
	600WQA4200-20-315		315						3130	2200					4090		

Installation instructions

◎Installation

1. Check the pump,motor, and fasteners before installation.
2. The weight of the pipeline should not be added to the pump to avoid deformation, vibration.etc.
3. The anchor bolts must be tightened during installation, and the guide rod and coupling gusset must be fixed.

◎Start up

1. The liquid level shall not be lower than the minimum liquid level when starting, the minimum liquid level is shown in the installation diagram.
2. Start the motor, check rotation direction. The pump should rotate clockwise looking down from the motor side.
3. (1)For centrifugal type impeller, close the valve and pressure gauge on the outlet pipeline.
   (2)For mixed-flow and axial-flow impellers, open the valve according to the pump model.
4. Start the motor,turn on the pressure gauge.As the speed rises,gradually adjust the valve opening extent on the outlet pipe to achieve the required flow.

◎Stop

1. First close the outlet valve, close the pressure gauge, and then cut off the motor power supply.
2. In case of long-term shutdown, it is recommended to lift the pump up, clean it up, put it in a dry place, and keep it properly.

◎Maintainance

1. Check the motor current value regularly
   When the ambient temperature is motor rated temperature, the current must not exceed the rated current.
   When the ambient temperature is lower than motor rated temperature, the current value can be slightly increased, please refer to the motor data for details.
   When the current is abnormal, please find out the cause immediately.
2. After long-term operation, the pump should be shut down for inspection due to the wear of mechanical seals, bearings, impellers, seal rings and other parts. And wearing parts like mechanical seals, bearings, O-rings and seal rings should be replaced. The general inspection cycle is normally one year.The service life of the mechanical seal is determined by the on-site working conditions, and the designed service life is 8000 hours.
3. Check the oil chamber regularly. If oil emulsification occurs, replace 32# engine oil in time. Executive standard: GB443-89

Diving cable connection

When the length of the cable cannot meet users' installation requirements, an external cable is required. The wiring should be operated by a full-time electrician. The cross-sectional area of the cable is determined by the installation length, motor power and starting method. The motor cable and the external cable joints are required to be reliably sealed, insulated, and have certain strength. The wiring process is briefly as follows.

1. Strip the cable on the sewage pump as shown in the figure below, and strip the copper core by 30~35mm long. Wipe it with gauze and copper wire to make it shine. Also strip the copper wire of the external three-core cable by 30~ 35mm,and wipe it clean with gauze.

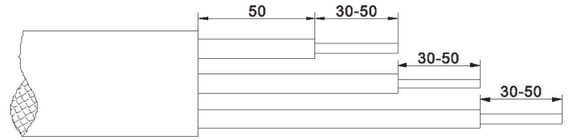

2. As shown in the figure below, insert the stripped copper wire parts of the three-core cable and external cable together, and then use a thin copper wire to bind tightly as shown in the figure, cut off the remaining part, flatten it with scissors, and do not tie your hands. Tie the three wires in the same way.

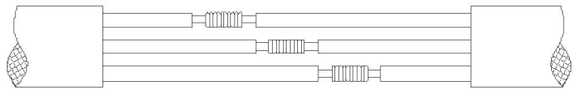

3. Prepare a small iron box or small iron pot that can stick the three wire ends, put solder into the pot and heat it on fire until it melts, and then apply proper amount of soldering oil to the three wire ends,quickly put into the pot and weld it firmly. The surface of the welding head is required to be smooth, free of burrs and false welding. If the welding is not strong or not smooth, it should be re-welded until it meets the requirements.

4. As shown in the figure below, when wrapping with polyester insulating tape, be sure to press half of the first circle (shift wrapping method) for 8~12 layers. After wrapping, wrap two more plastic tape layers for strength protection.

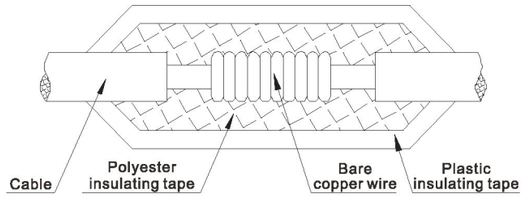

5. As shown in the figure below, wrap the three wires together with plastic tape by two layers. The first layer exceeds the end of each wire insulation layer by more than 50mm, and the second layer exceeds the first layer by more than 50mm. It needs to be tightly wound to exclude air space to the largest extent.

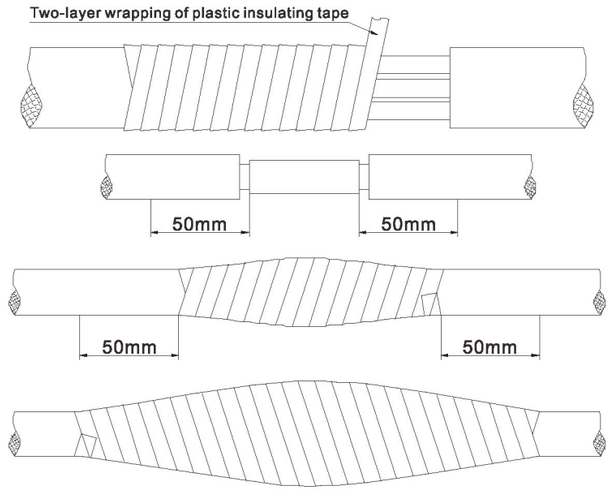

6. After wrapping, take a basin of cold water and completely soak the banded thread in the water. Measure the insulation with a 500V megohmmeter after 12 hours.The insulation should not be less than 50 megohms, otherwise it should be re-wrapped until it meets the requirements.

7. The grounding wire of the submersible electric pump also needs to be wrapped according to the wiring process requirements of the submersible cable.

◎ Note: Customer needs to calculate voltage drop when connecting additional cable.Pay attention to voltage change during operation which should be generally controlled within±5% of the rated voltage.

Common malfunctions and solutions

Malfunctions	Cause analysis	Solutions
None or insufficient pump water flow	◎ Motor reverse rotation	◎ Adjust two phase power sequence
	◎ The impeller passage or pipeline is blocked	◎ Remove impurities, it is best to adda thin grille at the water inlet
	◎ Tubing resistance is too large	◎ ①Reduce pipeline bends, increase diameter for long pipe ②Check whether the valve is open ③Check whether the impeller is scraped
	◎ The impeller is severely worn	◎ Replace the impeller
	◎ Gas mixed in the medium	◎ Exhaust gas, increase liquid depth to reach the minimum water level requirement "Δ"
	◎ Check valve direction is reversed	◎ Adjust the direction of the check valve
	◎ Head on customer's site is not enough	◎ Check whether customer's test method is correct after excluding the above reasons
	◎ Coupling leaks	◎ Check whether the installation is proper and ensure that the guide rod is vertical
The pump fails to start	◎ Lack of phase	◎ Check the circuit, eliminate problem of lack-phase
	◎ Impeller stucks	◎ Clear impurities
	◎ Short circuit of winding joint or cable	◎ Recover after checking with ohmmeter
	◎ Stator winding burnt out	◎ Replace the winding or stator, it is better to add a temperature measuring element
	◎ Control cabinet error	◎ Check the control cabinet and remove fault
	◎ Low power supply voltage	◎ Solve power supply voltage problems
Large fluctuations in discharge pressure	◎ The liquid level of suction pool is too low	◎ Control the minimum liquid level of the suction pool
	◎ The suction elbow is not tightly sealed, making air entering the pump	◎ Check the pipe connection and eliminate the cause
	◎ Medium temperature is high	◎ Reduce medium temperature. If the temperature cannot be lowered, increase the pump minimum liquid level and replace high-temperature motor
Overloading current	◎ The head of the selected pump exceeds the actual head. Or the head of the device is greatly reduced, indicating that the pump is running at a large flow rate	◎ Reduce outlet pipe valve opening or the outer diameter of small impeller, or replace a pump that matches the actual working conditions on site
	◎ The density or viscosity of the medium is too high	◎ Dilute medium
	◎ Bearing is damaged	◎ Replace bearing
	◎ There are impurities at the neck ring	◎ Clean up impurities
	◎ Power supply voltage is too low	◎ Solve power supply voltage problems
Heating bearing	◎ Bearing wears	◎ Replace the bearing
	◎ Bearing grease is too little or too much	◎ The amount of grease added is about 1/3~1/2 of the oil chamber cavity
	◎ Grease is degenerative	◎ Change grease

Reserve authority for technical changes
2021.12